#69-F-238M

SITE 23-227

LOT 18

CONCESSIONS 5 AND 6

BRIDGE

BA 3157
Site 23-227

DOMINION SOIL INVESTIGATION LIMITED

CONSULTING SOIL & FOUNDATION ENGINEERS

HEAD OFFICE
104 CROCKFORD BLVD.
SCARBOROUGH, ONT.
CANADA
TELEPHONE: 751-6565

BRANCH OFFICE
369 QUEENS AVE.
LONDON, ONT.
TELEPHONE: 433-3851

ASSOCIATED COMPANY
SOIL TESTING AND ENGINEERING LTD.
39 BRENTFORD ROAD
KINGSTON 5, JAMAICA
WEST INDIES

A. M. SPRIET & ASSOCIATES LTD
CONSULTING ENGINEERS
LONDON ONTARIO

69-F-238M

DEC 69

Report on

SOIL INVESTIGATION

for

PROPOSED BRIDGE

LOT 18 CONCESSIONS 5 & 6

TOWNSHIP OF DEREHAM

by

DOMINION SOIL INVESTIGATION LIMITED
369 Queens Avenue
LONDON 14 ONTARIO

Our Reference: 9-11-L6
December 10th, 1969.

C O N T E N T S

E N C L O S U R E S

SUMMARY

The natural soil profile below the creek bed consists of a silt stratum, which exhibits cohesion on the east side of the bridge and is non-cohesive on the west side of the bridge. The relative density of the non-cohesive silt was found to be 'very dense', and the consistency of the cohesive silt is described as 'very stiff'.

It is recommended that the structure be supported on spread footing foundations at the proposed footing grade of El. 83, using a maximum allowable soil pressure of 5 tons per square foot for the design. Total settlement is estimated to be 1-inch or less.

No unusual construction problems are anticipated.

I INTRODUCTION

In accordance with instructions from A. M. Spriet & Associates Limited, Consulting Engineers, a soil investigation has been carried out in the Township of Dereham, where it is proposed to replace an existing road bridge with a new structure.

The existing structure is located at Lot 18 Concessions 5 and 6 of the Township, where the road crosses Reynolds Creek.

It is understood that the proposed bridge will be centred on the existing bridge. The requirements of the project were discussed with Mr. W. E. Kelley, P. Eng., who supplied the foregoing information.

The purpose of this investigation was to reveal the subsurface conditions at the site, and to determine the relevant soil properties for the design and construction of the new foundations.

II FIELD WORK

The field work, consisting of two boreholes and two dynamic cone penetration tests, was carried out on December 3 and 4, 1969, at the locations shown on Enclosure 1. The holes were advanced to the sampling depths by a continuous flight auger machine, which was equipped for soil sampling.

Standard penetration tests were performed at frequent intervals of depth, as detailed in Appendix 'A', and the results are recorded on the borehole logs as 'N' values.

The dynamic cone penetration tests were performed adjacent to each borehole location to obtain an indication of soil density and strata changes with depth. The same source of energy was used to drive the cone as was used for the standard penetration tests.

Elevations were referred to a nail in a hydro pole, 25 feet south of Station 0+41E, which was taken as El. 99.23 feet.

III SUBSURFACE CONDITIONS

Detailed descriptions of the strata which were encountered in each borehole are given on the borehole logs, comprising Enclosures 2 and 3, and a general picture of the soil stratigraphy is presented in the form of a Subsurface Profile on Enclosure 1. The following notes are intended only to amplify this data:-

Both boreholes penetrated fill deposits which extend down to El. 93 and 94.5 at borehole 1 and 2 locations respectively. Borehole 1 also encountered a layer of silty sand and gravel slightly above the creek bed level, which revealed a thickness of 2.5 feet.

The predominant soil type consists of silt, which was found to be cohesive at borehole 2 location and non-cohesive at borehole 1 location. 'N' values in the silt ranged from 23 to 87 blows per foot, which indicate a 'very dense' relative density in the case of the non-cohesive deposit, and a 'very stiff' consistency in the case of the cohesive subsoil. The silt stratum also differed at the two locations in that the silt is a typical

homogeneous deposit at borehole 2 location, and at borehole 1 location seams of silty clay and fine sand were detected which indicate a laminated structure. These characteristics are typical of a fluvio-glacial deposit. Moisture contents within the silt stratum ranged from 9% to 21%, and were generally less than the Plastic Limit of the cohesive subsoil.

Borehole 1 was terminated in a 'dense' to 'very dense' fine sand stratum, and borehole 2 in a 'very dense' non-cohesive silt stratum.

IV GROUNDWATER CONDITIONS

The groundwater in borehole 1 reached equilibrium at El. 93.7, which was about 3 feet above the water level in the adjacent creek. Borehole 2 remained dry throughout the boring operation, and insufficient time was available for the water level to manifest itself.

V DISCUSSION AND RECOMMENDATIONS

The creek bed extends down to El. 90.1, and it is understood that the proposed footing grade is at about El. 83. This level lies within the very dense or very stiff silt stratum, and on the basis of the borehole results a maximum allowable soil pressure of 5 tons per square foot may be used for the design of the footings. This soil pressure incorporates a factor of safety of 3 against shear failure of the underlying soil.

Total settlement of footings mobilizing the above soil pressure is estimated to be 1-inch or less, and in view of the similar conditions encountered in the two boreholes, no appreciable differential settlement is anticipated.

The coefficient of friction between the footings and the silt material may be taken as 0.35, and the factor of safety against horizontal sliding of the abutments should be at least 1.5.

Due to the fine-grained nature and high density of the subsoil, very little seepage may be anticipated into excavations. It is possible that the sides of excavations will slough-in when insufficient cohesion is encountered within the silt stratum, however this can be counteracted by flattening the side slopes or providing temporary sheeting around the excavation. Seepage may be controlled by pumping from sumps dug below the footing grade.

Yours very truly,

DOMINION SOIL INVESTIGATION LIMITED

REGISTERED PROFESSIONAL ENGINEER
C. J.W. ATKINSON
PROVINCE OF ONTARIO

C.J.W. Atkinson, M.Sc., P.Eng.,
Branch Manager.

CJWA/jmc

APPENDIX 'A'.

THE STANDARD PENETRATION TEST.

In order to determine the relative density of non-cohesive soils, such as sands and gravels, the standard penetration test has been adopted. The test also gives an indication of the consistency of cohesive soils.

A two inch external diamter thick-walled sample tube is driven into the ground at the bottom of the borehole by means of a 140 lb. hammer falling freely through 30-ins. The tube is first driven an initial 6-inches to allow for the presence of disturbed material at the bottom of the borehole. The number of standard blows (N) required to drive the sampler a further 12-in. is recorded. The sample tube is one originally developed by Raymond Concrete Pile Company in the United States, where a sufficient number of tests have been made in conjunction with field investigations to show that the results, although essentially empirical, may be applied to foundation design.

For Sands:-

Values of 'N'.	Density.
Less than 10	Loose
Between 10 and 30	Compact
Between 30 and 50	Dense
Greater than 50	Very dense.

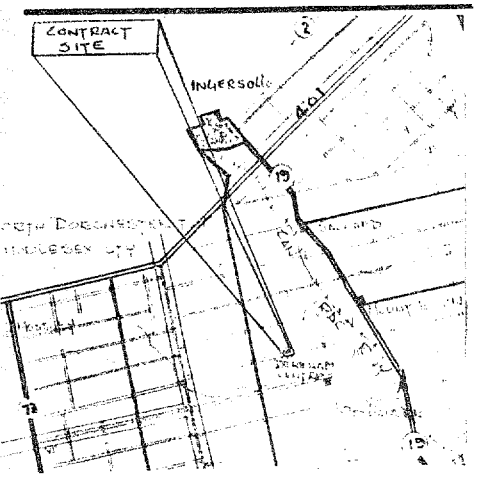

KEYPLAN

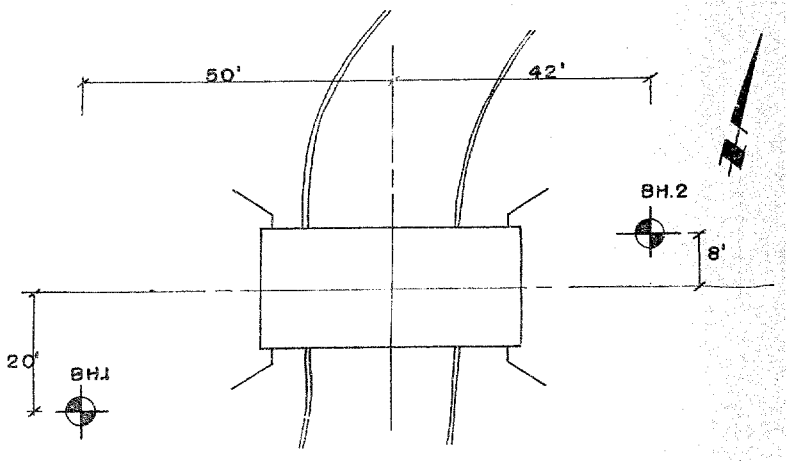

LOCATION OF BOREHOLES

SCALE 1" – 20'

LEGEND

- TOPSOIL
- SANDY GRAVEL FILL
- CLAYEY SILT FILL
- COMPACT SILTY SAND, SOME GRAVEL
- VERY DENSE NON-COHESIVE SILT
- VERY STIFF COHESIVE SILT
- VERY DENSE FINE SAND

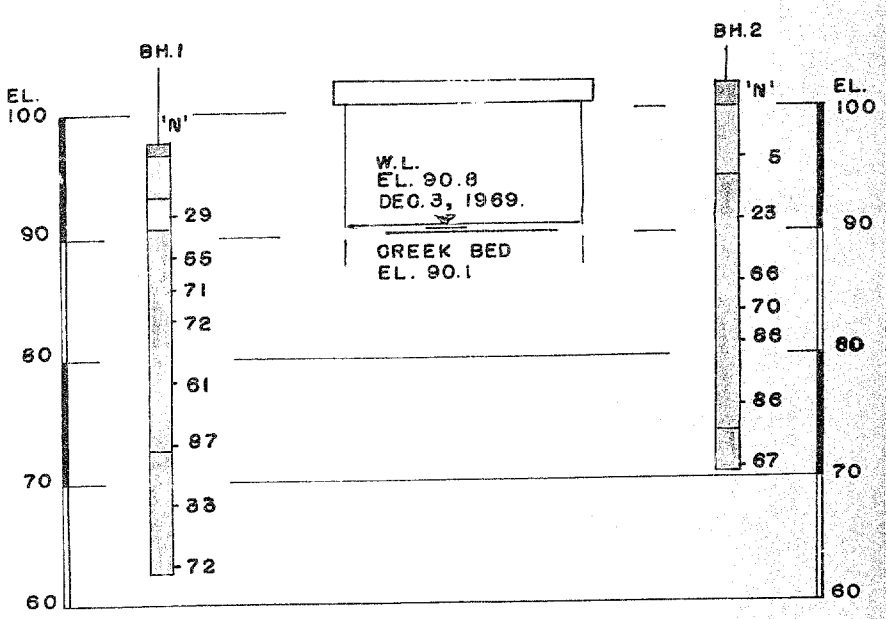

SUBSURFACE PROFILE

VERT. SCALE 1" – 10'

LOG OF BOREHOLE 1

Our Reference Nº 9-11-L6

Enclosure Nº 2

CLIENT: A. M. Spriet & Associates Limited
PROJECT: Proposed Bridge
LOCATION: Township of Dereham
DATUM ELEVATION: Nail in hydro pole, El. 99.23

DRILLING DATA
Method: Auger
Diameter: 4-inch
Date: December 3 and 4, 1969,

ELEVATION Ft.	DEPTH Ft.	DESCRIPTION	SYMBOL	GROUND WATER	NUMBER	TYPE	'N' Blows/Foot	REMARKS
97.5	0.0	Ground Surface						
	1.0	Topsoil						
95		Brown clayey silt						
	4.5	Compact grey silty sand some gravel			1	SS	29	
	7.0	Very dense grey silt, with seams of silty clay and fine sand			2	SS	55	
90					3	SS	71	
85					4	SS	72	
80					5	SS	61	
75					6	SS	87	
	25.0	Dense to very dense grey fine sand			7	SS	33	
70								
65					8	SS	72	
	35.0	End of Borehole						

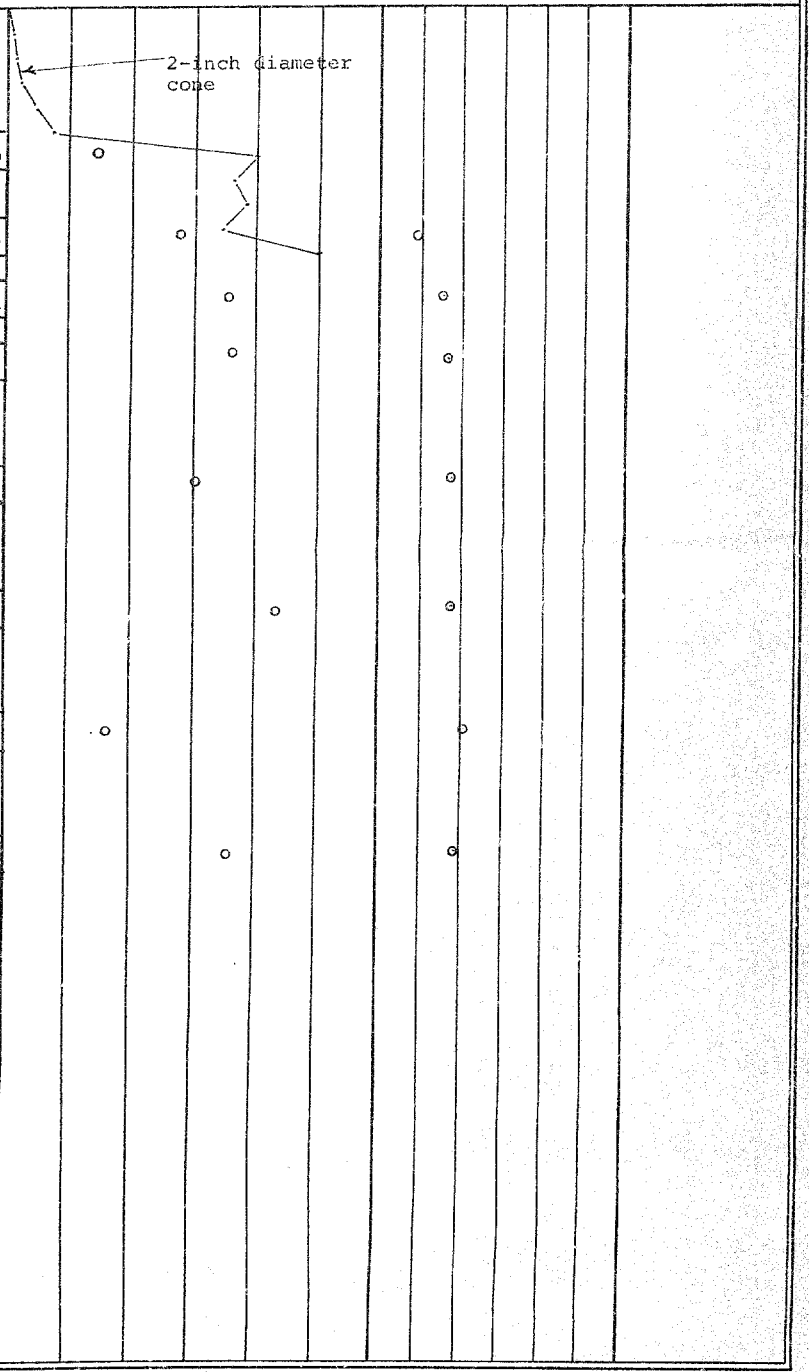

VERTICAL SCALE: 1 inch to 5 feet

DOMINION SOIL INVESTIGATION LIMITED

MADE: CHECKED:

LOG OF BOREHOLE 2

Our Reference Nº 9-11-L6

Enclosure Nº 3

CLIENT: A. M. Spriet & Associates Limited
PROJECT: Proposed Bridge
LOCATION: Township of Dereham
DATUM ELEVATION: Nail in hydro pole, El. 99.23

DRILLING DATA
Method: Auger
Diameter: 4-inch
Date: December 4, 1969

ELEVATION Ft.	DEPTH Ft.	DESCRIPTION	SYMBOL	GROUND WATER	NUMBER	TYPE	'N' Blows / Foot	REMARKS
102.0	0.0	Ground Surface						
100	2.0	Sandy gravel (Fill)						
		Brown clayey silt (Fill)			1	SS	5	
95	7.5	Very stiff grey cohesive silt with a trace of sand			2	SS	23	
90					3	SS	66	
85					4	SS	70	
80					5	SS	86	
75	28.0				6	SS	86	
		Very dense grey silt			7	SS	67	
70	31.5	End of Borehole						

SUBSURFACE PROFILE — SAMPLES

PENETRATION RESISTANCE Blows / Foot: 20 40 60 80 100

UNDRAINED SHEAR STRENGTH lbs/sq.ft. + FIELD VANE TEST ⊙ COMPRESSION TEST

WATER CONTENT %: PLASTIC LIMIT W_P — NATURAL W — LIQUID LIMIT W_L; 10 20 30 40 50

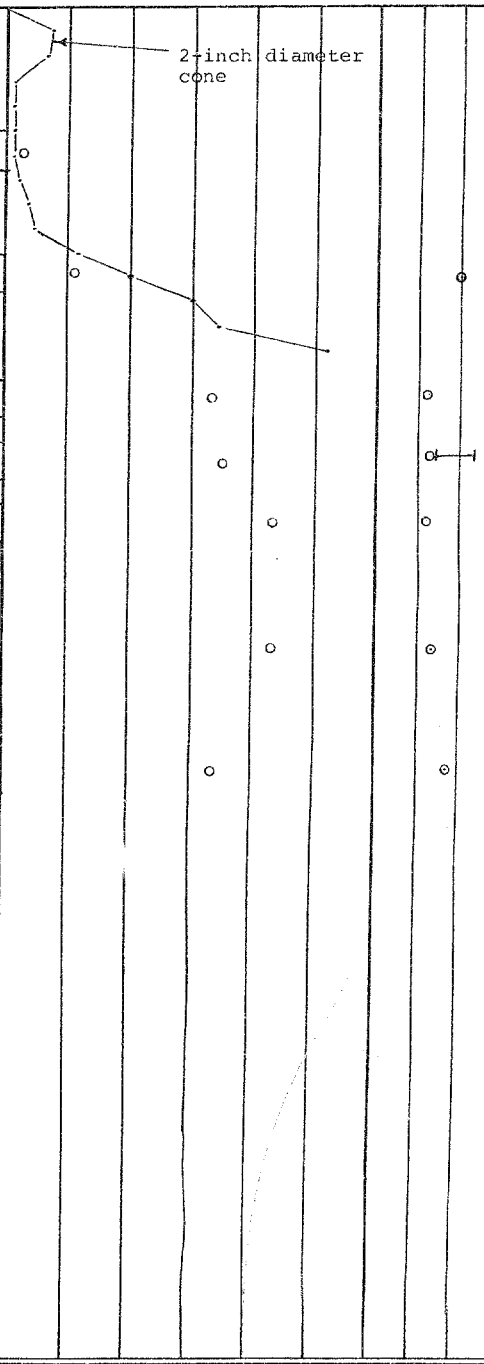

VERTICAL SCALE: 1 inch to 5 feet

DOMINION SOIL INVESTIGATION LIMITED

MADE: CHECKED: