CONTRACT DRAWINGS

CONTRACT NO. 2018-4008

BOOK 2 OF 4

EASTERN REGION

Ministry Of Transportation

Ontario

INDEX

W.P. No. 4013-11-00

Contract No. 2018-4008

Sheet No.	Description
	CONTRACT DRAWINGS - Book 1 of 4
	Title Sheet (Key Plan)
	Index
	GRADING
1 - 15	Horizontal Alignments
16 - 90	Construction Staging
	CONTRACT DRAWINGS - Book 2 of 4
91 - 98	Removals
99 - 100	Pavement Data
101 - 108	New Construction
109 - 115	Profiles
116 - 134	Pavement Markings and Signs
135 - 141	Soil Data
142 - 151	Typical Sections
152 - 161	Miscellaneous Details
162 - 163	Settlement Monitoring Locations
164 - 166	Excavation and Backfill Details
	CONTRACT DRAWINGS - Book 3 of 4
	ELECTRICAL
167 - 171	Electrical Layout
172 - 175	Wiring Diagrams
176 - 194	Temporary
195 - 197	Electrical Removals
	CONTRACT DRAWINGS - Book 4 of 4
	STRUCTURAL
	Raisin River Bridge - EBL, Site No. 31-231.1
	Raisin River Bridge - WBL, Site No. 31-231.2

Sheet No.	Description
198	General Arrangement
199 - 204	Borehole Locations and Strata
205 - 206	Construction Staging
207 - 234	Construction Drawings
	Finney Creek Culvert, Site No. 31-260/C
235	General Arrangement
236 - 237	Construction Drawings
	County Road 2/34 Underpass, Site No. 31-232
238	General Arrangement
239	Borehole Locations and Strata
240 - 264	Construction Drawings
	QUANTITY SHEETS - Book 1 of 1
	Index Sheet
1 - 180	Grading Items
181 - 231	Electrical Items
232 - 240	Structural Items

METRIC

PLATE No

CONT No 2018–4008
WP No 4013–11–00

REMOVALS

HIGHWAY 401

STA. 26+500 TO STA. 26+850

SHEET 91

DILLON CONSULTING

LICENSED PROFESSIONAL ENGINEER
M.P. VAN HAREN
100185224
Jan 22/19
PROVINCE OF ONTARIO

SUPPLEMENTAL REMOVALS LEGEND

- FULL DEPTH REMOVAL OF COMPOSITE PAVEMENT (ASPHALT SURFACED)
- REMOVAL OF ASPHALT PAVEMENT FULL DEPTH
- REMOVAL OF ASPHALT PAVEMENT PARTIAL DEPTH
- REMOVAL OF ASPHALT PAVEMENT (FULL DEPTH) FROM CONCRETE SURFACES ON STRUCTURES
- REMOVAL OF ASPHALT PAVEMENT (FULL DEPTH) FROM CONCRETE SURFACES
- CLEARING AND GRUBBING
- SPRAYING AND CUTTING PHRAGMITES

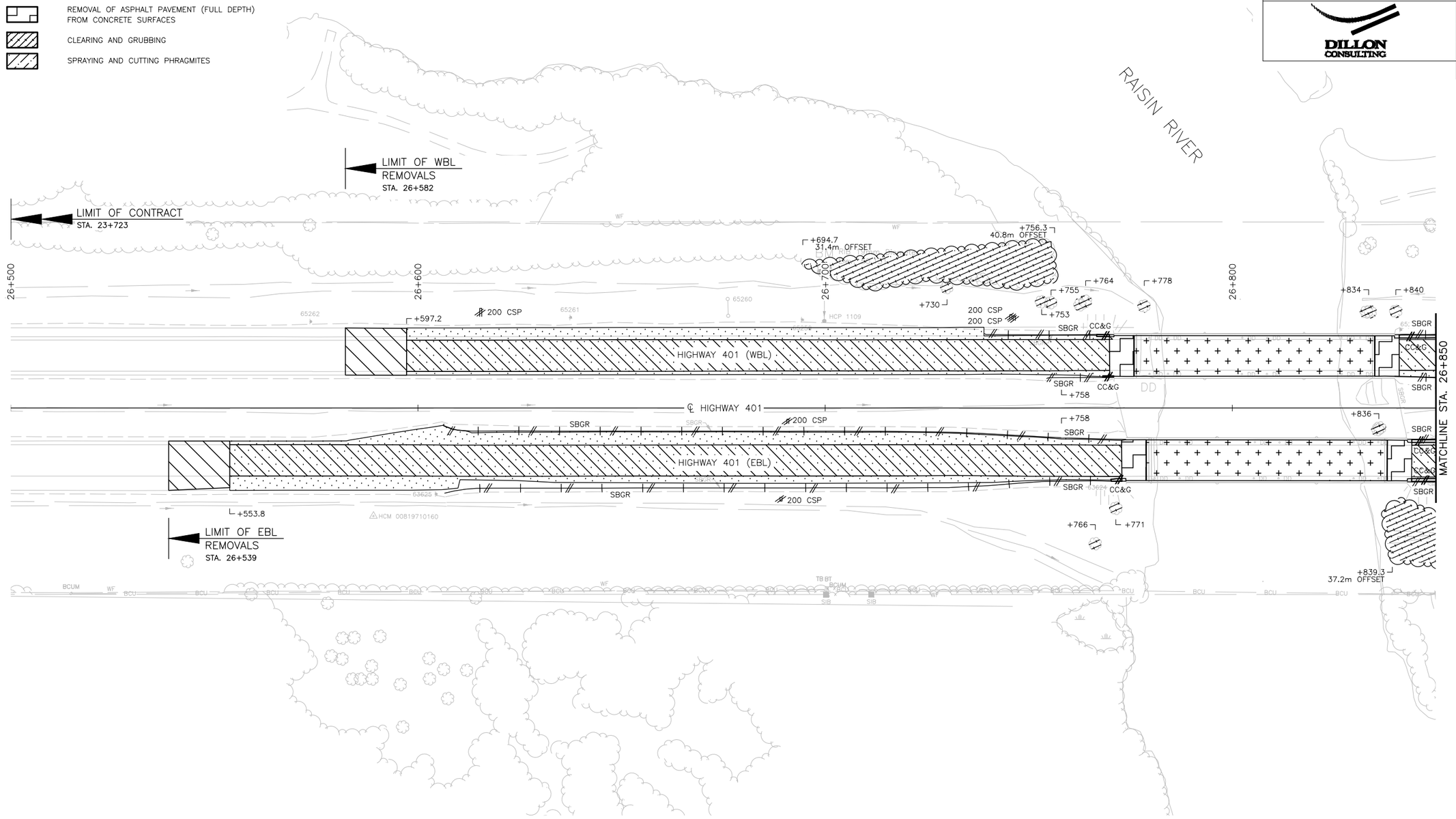

DATE PLOTTED: 1/21/2019 5:01:06 PM
FILE LOCATION: C:\projectwise\working directory\active\10mcr\d0517908\4013-11-00 Removals.dwg

METRIC

PLATE No

CONT No 2018–4008
WP No 4013–11–00

REMOVALS

HIGHWAY 401

STA. 26+850 TO STA. 27+200

SHEET 92

DILLON CONSULTING

LICENSED PROFESSIONAL ENGINEER
M.P. VAN HAREN
100185224
JAN 22/19
PROVINCE OF ONTARIO

SUPPLEMENTAL REMOVALS LEGEND

- FULL DEPTH REMOVAL OF COMPOSITE PAVEMENT (ASPHALT SURFACED)
- REMOVAL OF ASPHALT PAVEMENT FULL DEPTH
- REMOVAL OF ASPHALT PAVEMENT PARTIAL DEPTH
- REMOVAL OF ASPHALT PAVEMENT (FULL DEPTH) FROM CONCRETE SURFACES ON STRUCTURES
- REMOVAL OF ASPHALT PAVEMENT (FULL DEPTH) FROM CONCRETE SURFACES
- CLEARING AND GRUBBING
- SPRAYING AND CUTTING PHRAGMITES

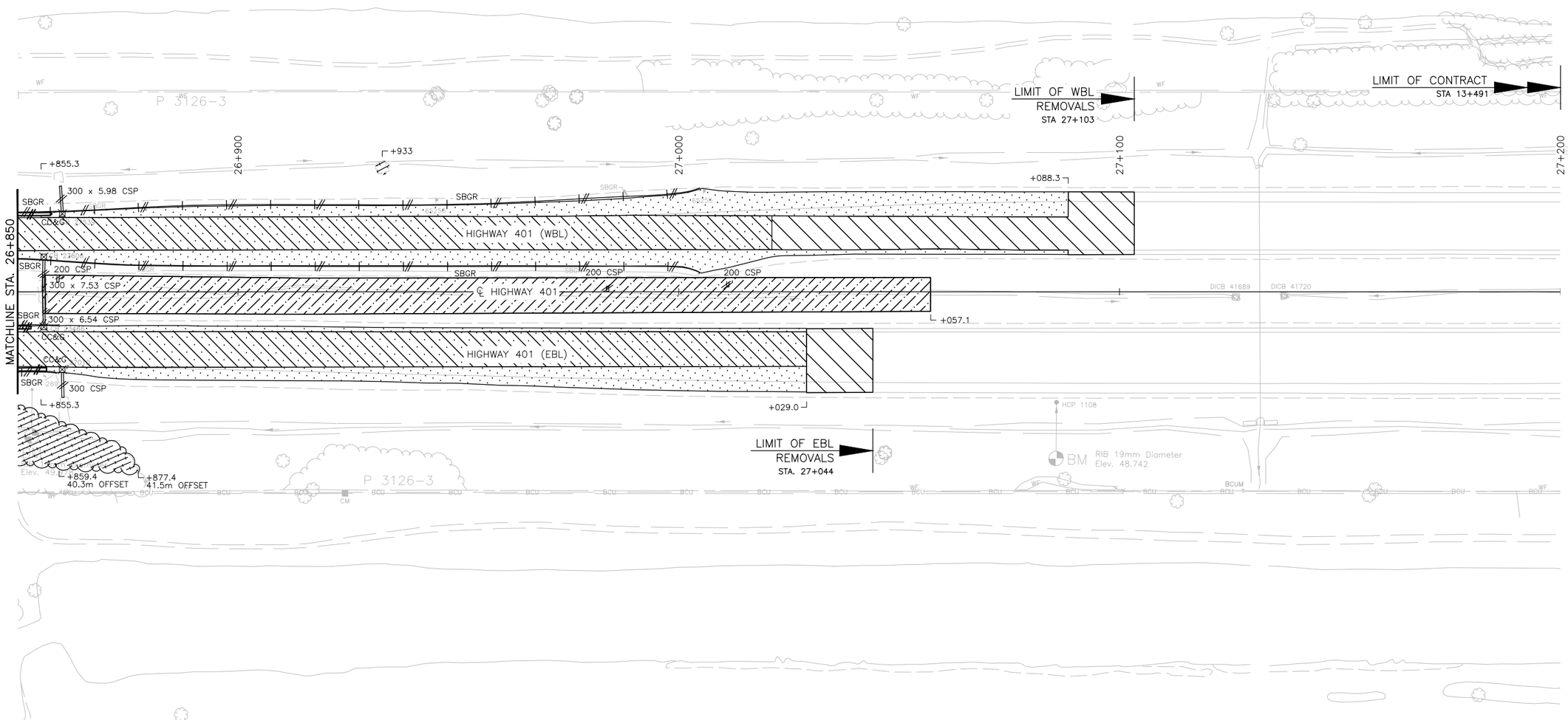

DATE PLOTTED: 1/21/2019 5:01:55 PM
FILE LOCATION: C:\projectwise\working directory\active\10mcr\d0517908\4013-11-00 Removals.dwg

METRIC

PLATE No

CONT No 2018-4008
WP No 4013-11-00

REMOVALS

HIGHWAY 401

STA. 11+100 TO STA. 11+450

SHEET 93

DILLON CONSULTING

LICENSED PROFESSIONAL ENGINEER
M.P. VAN HAREN
100185224
Jan 22/19
PROVINCE OF ONTARIO

SUPPLEMENTAL REMOVALS LEGEND

- FULL DEPTH REMOVAL OF COMPOSITE PAVEMENT (ASPHALT SURFACED)
- REMOVAL OF ASPHALT PAVEMENT PARTIAL DEPTH
- REMOVAL OF ASPHALT PAVEMENT FULL DEPTH

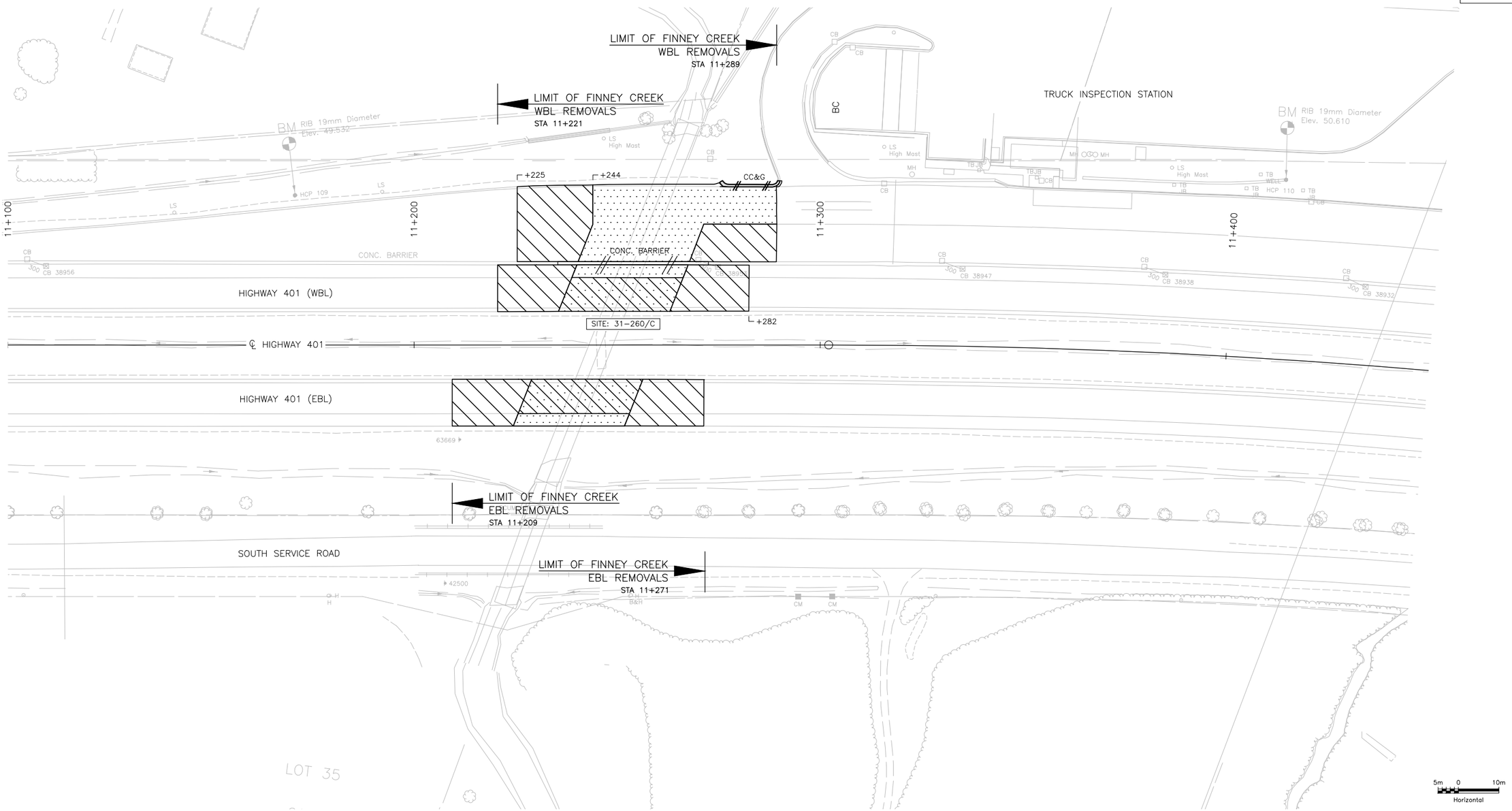

DATE PLOTTED: 1/16/2019 1:16:14 PM
FILE LOCATION: C:\projectwise\working directory\active\10mcr\d0584061\4013-Removals.dwg

METRIC

PLATE No

CONT No 2018-4008
WP No 4013-11-00

REMOVALS

SHEET 94

COUNTY ROAD 2/34
RAMPS

DILLON CONSULTING

LICENSED PROFESSIONAL ENGINEER
M.P. VAN HAREN
100185224
Jan 22/19
PROVINCE OF ONTARIO

SUPPLEMENTAL REMOVALS LEGEND

- REMOVAL OF ASPHALT PAVEMENT FULL DEPTH
- REMOVAL OF ASPHALT PAVEMENT PARTIAL DEPTH
- REMOVAL OF ASPHALT PAVEMENT (FULL DEPTH) FROM CONCRETE SURFACES ON STRUCTURES
- REMOVAL OF ASPHALT PAVEMENT (FULL DEPTH) FROM CONCRETE SURFACES
- REMOVAL OF CONCRETE SIDEWALK
- GRUBBING
- CLEARING AND GRUBBING
- SPRAYING AND CUTTING PHRAGMITES

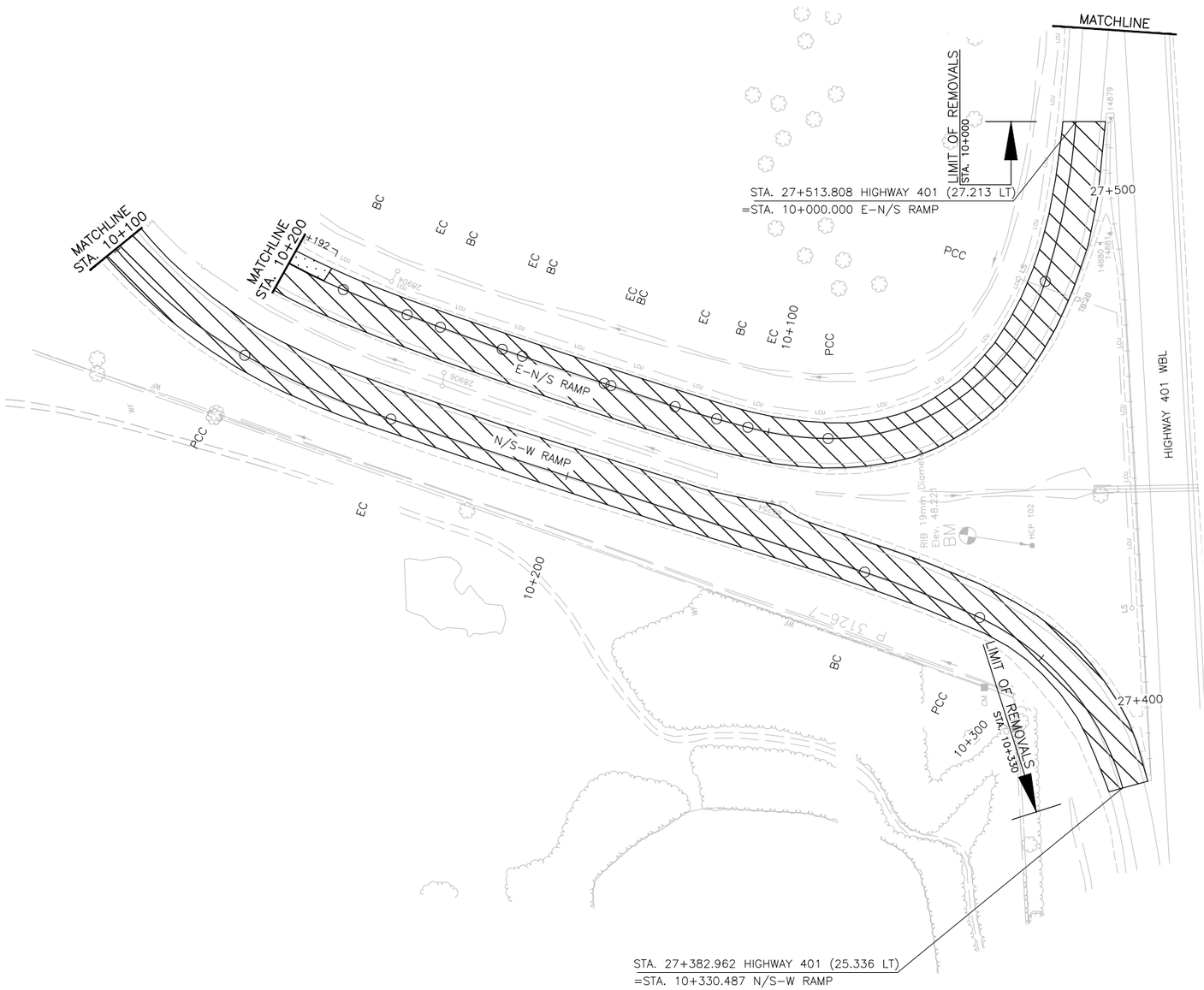

5m 0 10m
Horizontal

DATE PLOTTED: 1/16/2019 2:54:36 PM
FILE LOCATION: C:\projectwise\working_directory\active\10mcr\d0517910\4013-Removals.dwg

METRIC

PLATE No

CONT No 2018-4008
WP No 4013-11-00

REMOVALS

SHEET 95

COUNTY ROAD 2/34
RAMPS

DILLON CONSULTING

LICENSED PROFESSIONAL ENGINEER
M.P. VAN HAREN
100185224
JAN 22/19
PROVINCE OF ONTARIO

SUPPLEMENTAL REMOVALS LEGEND

- REMOVAL OF ASPHALT PAVEMENT FULL DEPTH
- REMOVAL OF ASPHALT PAVEMENT PARTIAL DEPTH
- REMOVAL OF ASPHALT PAVEMENT (FULL DEPTH) FROM CONCRETE SURFACES ON STRUCTURES
- REMOVAL OF ASPHALT PAVEMENT (FULL DEPTH) FROM CONCRETE SURFACES
- REMOVAL OF CONCRETE SIDEWALK
- GRUBBING
- CLEARING AND GRUBBING
- SPRAYING AND CUTTING PHRAGMITES

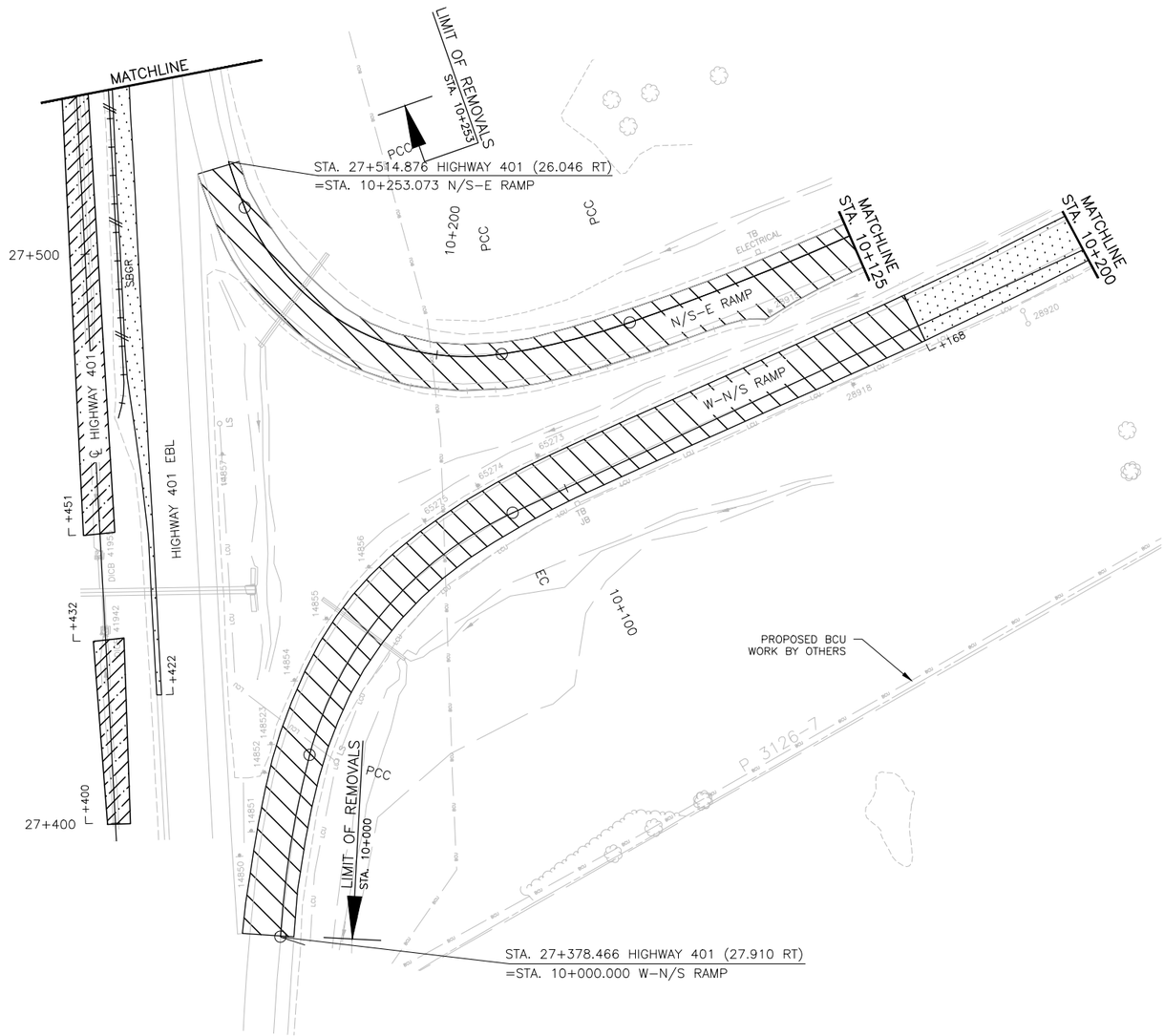

5m 0 10m
Horizontal

DATE PLOTTED: 1/21/2019 8:29:24 PM
FILE LOCATION: C:\projectwise\working_directory\active\10mcr\d0517910\4013-Removals.dwg

METRIC

PLATE No

CONT No 2018–4008

WP No 4013–11–00

REMOVALS

SHEET 96

COUNTY ROAD 2/34

STA. 9+550 TO STA. 9+850

DILLON CONSULTING

LICENSED PROFESSIONAL ENGINEER
M.P. VAN HAREN
100185224
Jan 22/19
PROVINCE OF ONTARIO

SUPPLEMENTAL REMOVALS LEGEND

- REMOVAL OF ASPHALT PAVEMENT FULL DEPTH
- REMOVAL OF ASPHALT PAVEMENT PARTIAL DEPTH
- REMOVAL OF ASPHALT PAVEMENT (FULL DEPTH) FROM CONCRETE SURFACES ON STRUCTURES
- REMOVAL OF ASPHALT PAVEMENT (FULL DEPTH) FROM CONCRETE SURFACES
- REMOVAL OF CONCRETE SIDEWALK
- GRUBBING
- CLEARING AND GRUBBING
- SPRAYING AND CUTTING PHRAGMITES

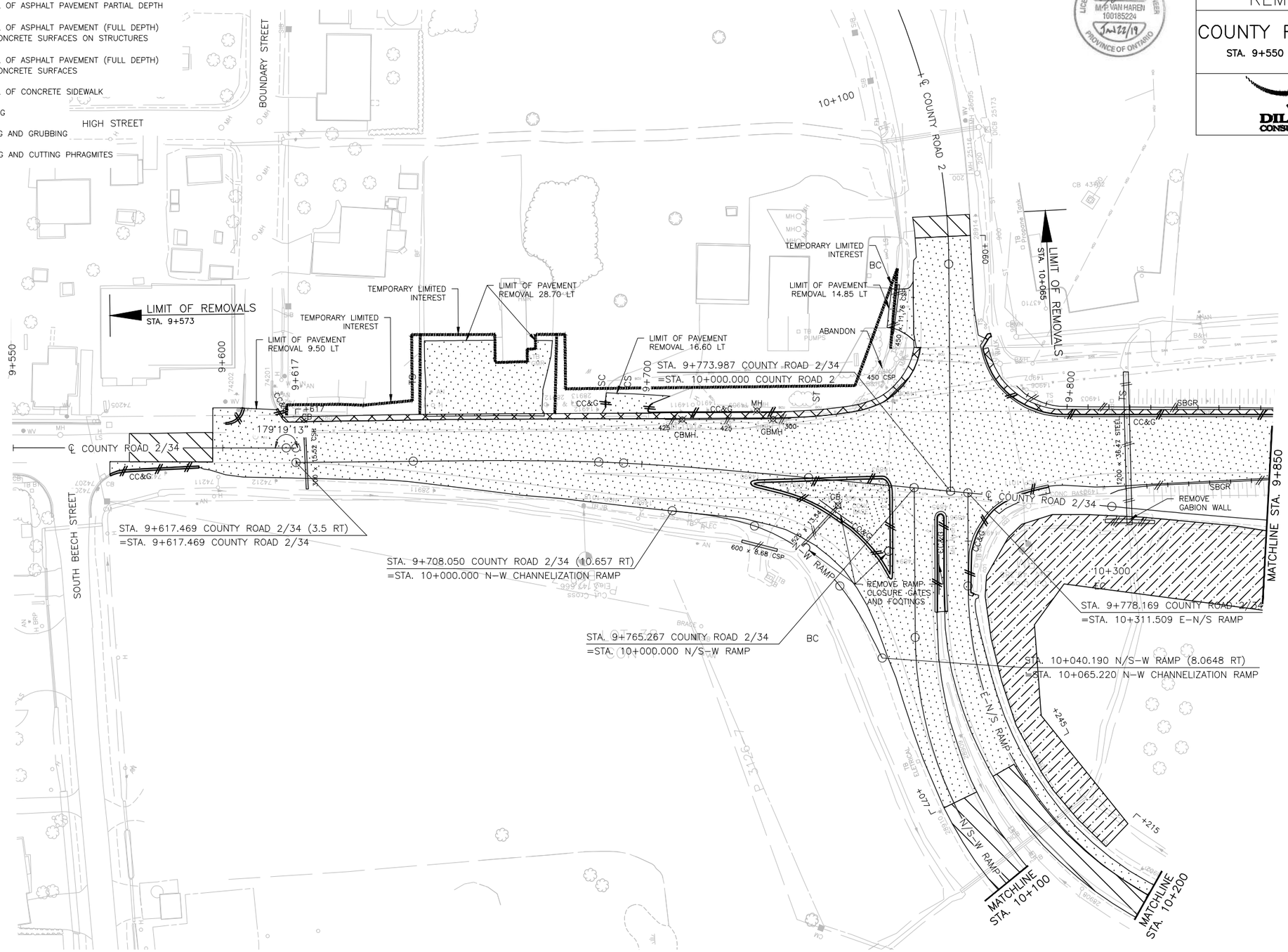

DATE PLOTTED: 1/21/2019 2:31:26 PM
FILE LOCATION: C:\projectwise\working_directory\active\10mcr\d0517910\4013-Removals.dwg

METRIC

PLATE No

CONT No 2018–4008

WP No 4013–11–00

REMOVALS

COUNTY ROAD 2/34

STA. 9+850 TO STA. 10+150

SHEET 97

DILLON CONSULTING

LICENSED PROFESSIONAL ENGINEER
M.P. VAN HAREN
100185224
Jan 22/19
PROVINCE OF ONTARIO

SUPPLEMENTAL REMOVALS LEGEND

- REMOVAL OF ASPHALT PAVEMENT FULL DEPTH
- REMOVAL OF ASPHALT PAVEMENT PARTIAL DEPTH
- REMOVAL OF ASPHALT PAVEMENT (FULL DEPTH) FROM CONCRETE SURFACES ON STRUCTURES
- REMOVAL OF ASPHALT PAVEMENT (FULL DEPTH) FROM CONCRETE SURFACES
- REMOVAL OF CONCRETE SIDEWALK
- GRUBBING
- CLEARING AND GRUBBING
- SPRAYING AND CUTTING PHRAGMITES

GENERAL NOTES:

1. CLEARING OF VEGETATION WEST OF COUNTY ROAD 2/34 AND NORTH OF THE SOUTH RAMP TERMINAL COMPLETED IN PRE–CLEARING CONTRACT.

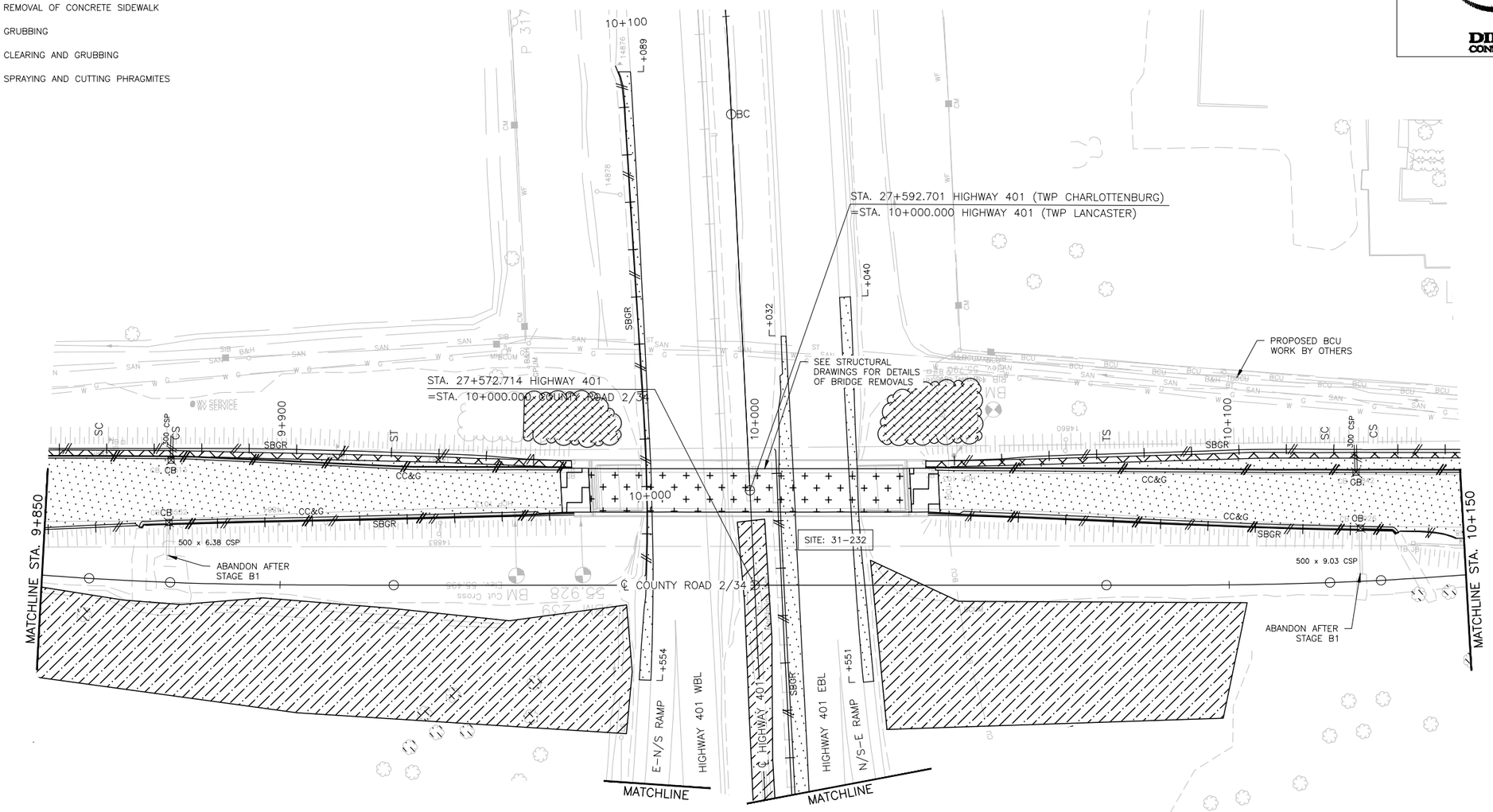

5m 0 10m
Horizontal

DATE PLOTTED: 1/21/2019 2:37:24 PM
FILE LOCATION: C:\projectwise\working directory\active\10mcr\d0517910\4013-Removals.dwg

METRIC

PLATE No

CONT No 2018-4008
WP No 4013-11-00

REMOVALS

COUNTY ROAD 2/34

STA. 10+150 TO STA. 10+500

SHEET 98

DILLON CONSULTING

LICENSED PROFESSIONAL ENGINEER
M.P. VAN HAREN
100185224
Jan 22/19
PROVINCE OF ONTARIO

SUPPLEMENTAL REMOVALS LEGEND

- REMOVAL OF ASPHALT PAVEMENT FULL DEPTH
- REMOVAL OF ASPHALT PAVEMENT PARTIAL DEPTH
- REMOVAL OF ASPHALT PAVEMENT (FULL DEPTH) FROM CONCRETE SURFACES ON STRUCTURES
- REMOVAL OF ASPHALT PAVEMENT (FULL DEPTH) FROM CONCRETE SURFACES
- REMOVAL OF CONCRETE SIDEWALK
- GRUBBING
- CLEARING AND GRUBBING
- SPRAYING AND CUTTING PHRAGMITES

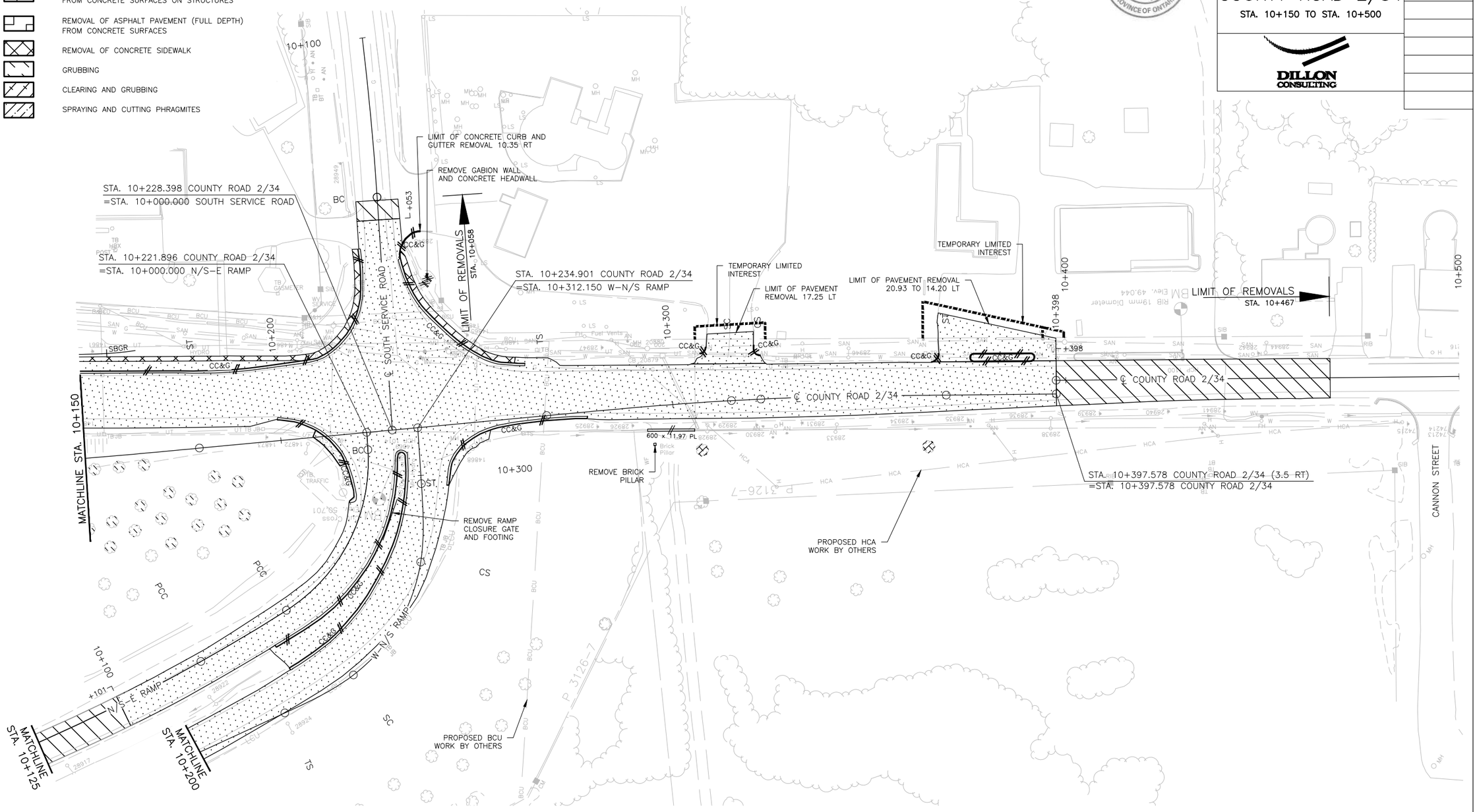

DATE PLOTTED: 1/21/2019 8:05:26 PM
FILE LOCATION: C:\projectwise\working_directory\active\10mcr\d0517910\4013-Removals.dwg

METRIC

LICENSED PROFESSIONAL ENGINEER
M.P. VAN HAREN
100185224
Jan 22/19
PROVINCE OF ONTARIO

PLATE No
CONT No 2018–4008
WP No 4013–11–00

PAVEMENT DATA

HIGHWAY 401

SHEET
99

DILLON CONSULTING

PAVEMENT DATA CHART

LOCATION	DESCRIPTION	SURFACE				BINDER								225mm CONCRETE BASE	225mm CONCRETE PAVEMENT	10mm WATERPROOFING
		40mm Superpave 12.5 FC2	50mm Superpave 12.5 FC2	40mm Superpave 12.5	50mm Superpave 12.5	40mm Superpave 12.5 FC2	2–50mm Superpave 19.0	60mm Superpave 19.0	2–60mm Superpave 19.0	70mm Superpave 19.0	2–70mm Superpave 19.0	2–75mm Superpave 19.0	25–80mm Superpave 19.0 Padding			
HIGHWAY 401 WBL	Sta. 23+739 to 26+582	●														
	Sta. 26+582 to 26+597.2		●													
	Sta. 26+597.2 to Structure		●					●					●	●		
	Approach Slabs	●				●										●
	Bridge Deck	●				●										●
	Structure to 27+021.1		●					●					●	●		
	Sta. 27+021.1 to 27+103		●													
	Sta. 11+221 to 11+238		●													
	Sta. 11+238 to 11+265		●								●			●		
	Sta. 11+265 to 11+282		●													
HIGHWAY 401 WBL SPEED CHANGE LANE	Sta. 26+674.0 to Structure		●				●	●								
	Structure to 27+088.0		●				●	●								
HIGHWAY 401 WBL PAVED SHOULDERS	Sta. 23+739 to 26+582			●								●				
	Sta. 26+582 to 26+597.2				●											
	Sta. 26+597.2 to Structure				●			●								
	Structure to Sta. 27+088				●			●								
	Sta. 27+088.0 to 27+103				●											
	Sta. 11+221 to 11+238				●											
	Sta. 11+238 to 11+265				●					●						
	Sta. 11+265 to 11+282				●											
TRUCK INSPECTION STATION	Sta. 11+225 to 11+244	●														
	Sta. 11+244 to 11+271	●							●							
	Sta. 11+244 to 11+289														●	
	Sta. 11+271 to 11+289	●														
HIGHWAY 401 EBL	Sta. 23+723 to 26+539	●														
	Sta. 26+539 to 26+553.8		●													
	Sta. 26+553.8 to Structure		●					●					●	●		
	Approach Slabs	●				●										●
	Bridge Deck	●				●										●
	Structure to Sta. 27+029.0		●					●					●	●		
	Sta. 27+029.0 to 27+044		●					●								
	Sta. 11+209 to 11+227		●													
	Sta. 11+227 to 11+254		●			●					●			●		
HIGHWAY 401 EBL SPEED CHANGE LANE	Sta. 11+254 to 11+271		●													
	Sta. 26+674.0 to Structure		●				●	●								
HIGHWAY 401 EBL PAVED SHOULDERS	Structure to 27+029.0		●				●	●								
	Sta. 23+723 to 26+539			●												
	Sta. 26+539 to 26+553.8				●											
	Sta. 26+553.8 to Structure				●			●								
	Structure to Sta. 27+029				●			●								
	Sta. 27+029.0 to 27+044				●											
	Sta. 11+219 to 11+227				●											
	Sta. 11+227 to 11+255				●					●						
	Sta. 11+255 to 11+261				●											

DATE PLOTTED: 1/16/2019 1:18:55 PM
FILE LOCATION: C:\projectwise\working_directory\active\10mcr\d0517910\4013-Pavement Data Chart.dwg

METRIC

LICENSED PROFESSIONAL ENGINEER
M.P. VAN HAREN
100185224
JAN 22/19
PROVINCE OF ONTARIO

PLATE No

CONT No 2018–4008
WP No 4013–11–00

PAVEMENT DATA

COUNTY ROAD 2/34

SHEET 100

DILLON CONSULTING

PAVEMENT DATA CHART

LOCATION	DESCRIPTION	SURFACE			BINDER			10mm WATERPROOFING
		40mm Superpave 12.5 FC1	40mm Superpave 12.5	50mm Superpave 12.5	40mm Superpave 12.5 FC1	50mm Superpave 19.0	60mm Superpave 19.0	
COUNTY ROAD 2/34	Sta. 9+578 to 9+598	●						
	Sta. 9+598 to 9+953	●				●	●	
	Approach Slabs	●			●			●
	Bridge Deck	●			●			●
	Sta. 10+045 to 10+398	●				●	●	
	Sta. 10+398 to 10+457	●						
COUNTY ROAD 2/34 PAVED SHOULDERS	Sta. 9+578 to 9+708	●				●		
	Sta. 10+258 to 10+398	●				●		
COUNTY ROAD 2/34 INTERCHANGE RAMPS	N–W Channelized Ramp	●				●	●	
	N/S–W Ramp	●				●	●	
	E–N/S Ramp	●				●	●	
	N/S–E Ramp	●				●	●	
	W–N/S Ramp	●				●	●	
COUNTY ROAD 2/34 INTERCHANGE RAMPS PAVED SHOULDERS	N–W Channelized Ramp	●				●		
	N/S–W Ramp	●				●		
	E–N/S Ramp	●				●		
	N/S–E Ramp	●				●		
	W–N/S Ramp	●				●		
COUNTY ROAD 2		●				●	●	
COUNTY ROAD 2 PAVED SHOULDERS		●				●		
SOUTH SERVICE ROAD		●				●	●	
COMMERCIAL DRIVEWAYS			●			●		
RESIDENTIAL DRIVEWAYS				●				

DATE PLOTTED: 1/17/2019 5:04:24 PM
FILE LOCATION: C:\projectwise\working_directory\active\10mcr\d0517910\4013-Pavement Data Chart.dwg

SUPPLEMENTAL NEW CONSTRUCTION LEGEND

HIGHWAY 401

RECONSTRUCTION
- 50mm SUPERPAVE 12.5 FC2
- 60mm SUPERPAVE 19.0
- 225mm CONCRETE BASE

RECONSTRUCTION
- 50mm SUPERPAVE 12.5 FC2
- 60mm SUPERPAVE 19.0
- 50mm SUPERPAVE 19.0
- 50mm SUPERPAVE 19.0

OVER MILLED SURFACE
- 50mm SUPERPAVE 12.5 FC2

FULLY PAVED SHOULDER
- 50mm SUPERPAVE 12.5
- 60mm SUPERPAVE 19.0

PAVED SHOULDER
- 40mm SUPERPAVE 12.5 FC2
- 60mm SUPERPAVE 19.0
- 60mm SUPERPAVE 19.0

MISCELLANEOUS
- 50mm SUPERPAVE 19.0

R — ROCK FLOW CHECK DAM (OPSD 219.211)

— B — BARRIER FOR TREE PROTECTION (OPSD 220.010)

—S— HEAVY DUTY SILT FENCE BARRIER (OPSD 219.130)

FIBRE ROLL FLOW CHECK DAM (OPSD 219.191)

STRUCTURES

- 40mm SUPERPAVE 12.5 FC2
- 40mm SUPERPAVE 12.5 FC2
- 10mm WATERPROOFING (DECK AND APPROACH SLABS)

GENERAL NOTES:

1. SEE MISCELLANEOUS DETAILS FOR PAVING FROM WBL STA. 23+739 TO STA. 26+582 AND EBL STA. 23+723 TO STA. 26+539.
2. CURB AND GUTTER AND SBGR LAYOUT ADJACENT TO RAISIN RIVER BRIDGES AS PER OPSD 912.530.
3. TRANSITION FROM TYPE M SBGR TO SBGR WITH CHANNEL FOR STRUCTURE CONNECTION AS PER OPSD 912.315.
4. REINSTATE HIGHWAY 401 MEDIAN AFTER REMOVING TEMPORARY MEDIAN CROSSOVERS FROM STA. 25+815 TO STA. 26+736 AND FROM STA. 26+900 TO STA. 27+590 USING 50mm TOPSOIL AND SEED AND MULCH.
5. HEAVY-DUTY SILT FENCE BARRIER TO BE INSTALLED AGAINST ABUTMENT COFFERDAMS SUCH THAT SEDIMENT IS EFFECTIVELY CONTAINED.
6. ALL SEWERS AND CULVERT OUTLETS TO HAVE RIP RAP TREATMENT AS PER OPSD 810.010 TYPE 'B' UNLESS OTHERWISE NOTED.
7. REINSTATE MEDIAN RUMBLE STRIP AS PER MTOD 503.020 AT THE FOLLOWING STATIONS:

HIGHWAY 401 EBL	HIGHWAY 401 WBL
STA. 26+116 – STA. 26+765	STA. 25+815 – STA. 26+042
STA. 26+848 – STA. 27+198	STA. 26+533 – STA. 26+765
STA. 27+214 – STA. 27+276	STA. 26+848 – STA. 27+321
STA. 27+450 – STA. 10+073	STA. 27+374 – STA. 10+009
STA. 11+003 – STA. 11+487	STA. 10+965 TO STA. 11+529

8. REINSTATE OUTSIDE RUMBLE STRIP AS PER MTOD 503.020 AT THE FOLLOWING STATIONS:

HIGHWAY 401 EBL	HIGHWAY 401 WBL
STA. 26+325 – STA. 26+674	STA. 26+587 – STA. 26+674
STA. 11+003 – STA. 11+487	STA. 11+045 – STA. 11+449

SUPPLEMENTAL ABBREVIATIONS

SH – SHOULDER
PS – PAVED SHOULDER
PPS – PARTIAL PAVED SHOULDER
SBEAT – STEEL BEAM ENERGY ATTENUATING TERMINAL

METRIC

LICENSED PROFESSIONAL ENGINEER
M.P. VAN HAREN
100185224
Jan 22/19
PROVINCE OF ONTARIO

PLATE No
CONT No 2018–4008
WP No 4013–11–00

NEW CONSTRUCTION

HIGHWAY 401

STA. 26+500 TO STA. 26+850

DILLON CONSULTING

SHEET 101

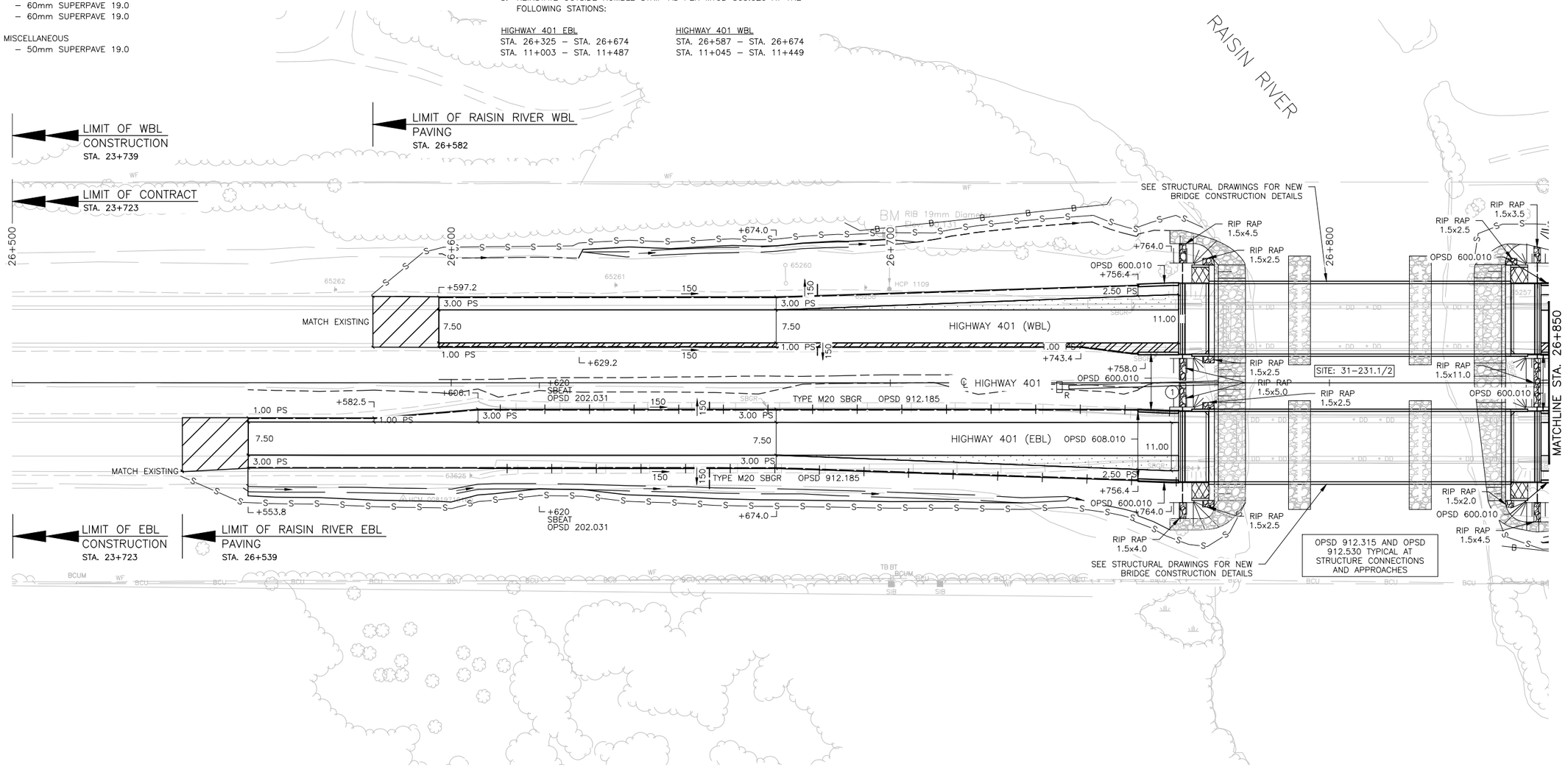

DATE PLOTTED: 1/22/2019 12:43:52 PM
FILE LOCATION: C:\projectwise\working_directory\active\10mcr\d0517908\4013-11-00 New Construction.dwg

SUPPLEMENTAL NEW CONSTRUCTION LEGEND

HIGHWAY 401

RECONSTRUCTION
- 50mm SUPERPAVE 12.5 FC2
- 60mm SUPERPAVE 19.0
- 225mm CONCRETE BASE

RECONSTRUCTION
- 50mm SUPERPAVE 12.5 FC2
- 60mm SUPERPAVE 19.0
- 50mm SUPERPAVE 19.0
- 50mm SUPERPAVE 19.0

OVER MILLED SURFACE
- 50mm SUPERPAVE 12.5 FC2

FULLY PAVED SHOULDER
- 50mm SUPERPAVE 12.5
- 60mm SUPERPAVE 19.0

PAVED SHOULDER
- 40mm SUPERPAVE 12.5 FC2
- 60mm SUPERPAVE 19.0
- 60mm SUPERPAVE 19.0

R ROCK FLOW CHECK DAM (OPSD 219.211)

— B — BARRIER FOR TREE PROTECTION (OPSD 220.010)

— S — HEAVY DUTY SILT FENCE BARRIER (OPSD 219.130)

FIBRE ROLL FLOW CHECK DAM (OPSD 219.191)

METRIC

LICENSED PROFESSIONAL ENGINEER
M. P. VAN HAREN
100185224
Jan 22/19
PROVINCE OF ONTARIO

PLATE No
CONT No 2018-4008
WP No 4013-11-00

NEW CONSTRUCTION

SHEET 102

HIGHWAY 401
STA. 26+850 TO STA. 27+200

DILLON CONSULTING

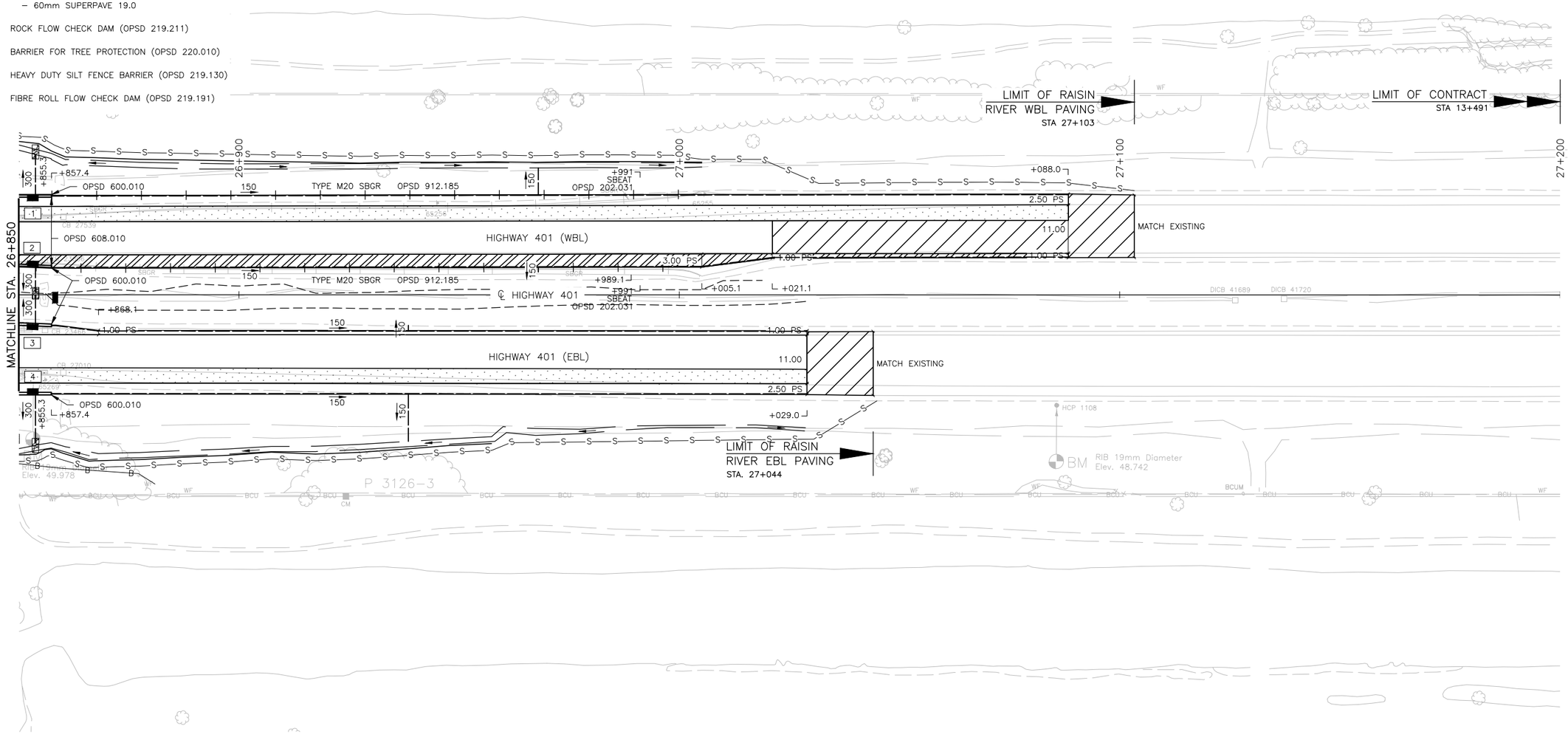

DATE PLOTTED: 1/21/2019 5:25:14 PM
FILE LOCATION: C:\projectwise\working_directory\active\10mcr\d0517908\4013-11-00 New Construction.dwg

METRIC

PLATE No
CONT No 2018–4008
WP No 4013–11–00

NEW CONSTRUCTION

HIGHWAY 401
STA. 11+100 TO STA. 11+450

SHEET 103

DILLON CONSULTING

SUPPLEMENTAL NEW CONSTRUCTION LEGEND

HIGHWAY 401

RECONSTRUCTION
- 50mm SUPERPAVE 12.5 FC2
- 70mm SUPERPAVE 19.0
- 70mm SUPERPAVE 19.0
- 225mm CONCRETE BASE

OUTSIDE 3.0m PAVED SHOULDER
- 50mm SUPERPAVE 12.5 FC2
- 70mm SUPERPAVE 19.0

MEDIAN 1.0m PAVED SHOULDER
- 40mm SUPERPAVE 12.5 FC1
- 50mm SUPERPAVE 19.0
- 60mm SUPERPAVE 19.0

OVER MILLED SURFACE
- 50mm SUPERPAVE 12.5 FC2

—S— HEAVY DUTY SILT FENCE BARRIER (OPSD 219.130)

TRUCK INSPECTION STATION

RECONSTRUCTION
- 225mm CONCRETE PAVEMENT

RECONSTRUCTION
- 40mm SUPERPAVE 12.5 FC2
- 60mm SUPERPAVE 19.0
- 60mm SUPERPAVE 19.0

OVER MILLED SURFACE
- 40mm SUPERPAVE 12.5 FC2

NOTES:

1. REINSTATE TYPE TW CONCRETE BARRIER BETWEEN HIGHWAY 401 WBL AND TRUCK INSPECTION STATION AS PER MTOD 911.132 FROM STA. 11+235 TO STA. 11+273.
2. CONCRETE PAVEMENT REINSTATEMENT AS PER OPSD 560.010.
3. REINSTATE RUMBLE STRIPS AS PER MTOD 503.020 AT THE FOLLOWING STATIONS:

HIGHWAY 401 EBL
STA. 11+003 – STA. 11+487 (MEDIAN)
STA. 11+003 – STA. 11+487 (OUTSIDE)

HIGHWAY 401 WBL
STA. 10+965 – STA. 11+529 (MEDIAN)
STA. 11+045 – STA. 11+449 (OUTSIDE)

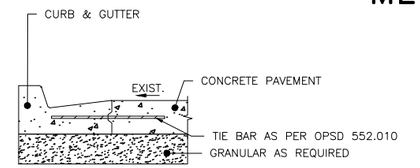

TYPICAL CONCRETE CURB AND GUTTER REINSTATEMENT AT FINNEY CREEK

LICENSED PROFESSIONAL ENGINEER
M.P. VAN HAREN
100185224
Jan 22/19
PROVINCE OF ONTARIO

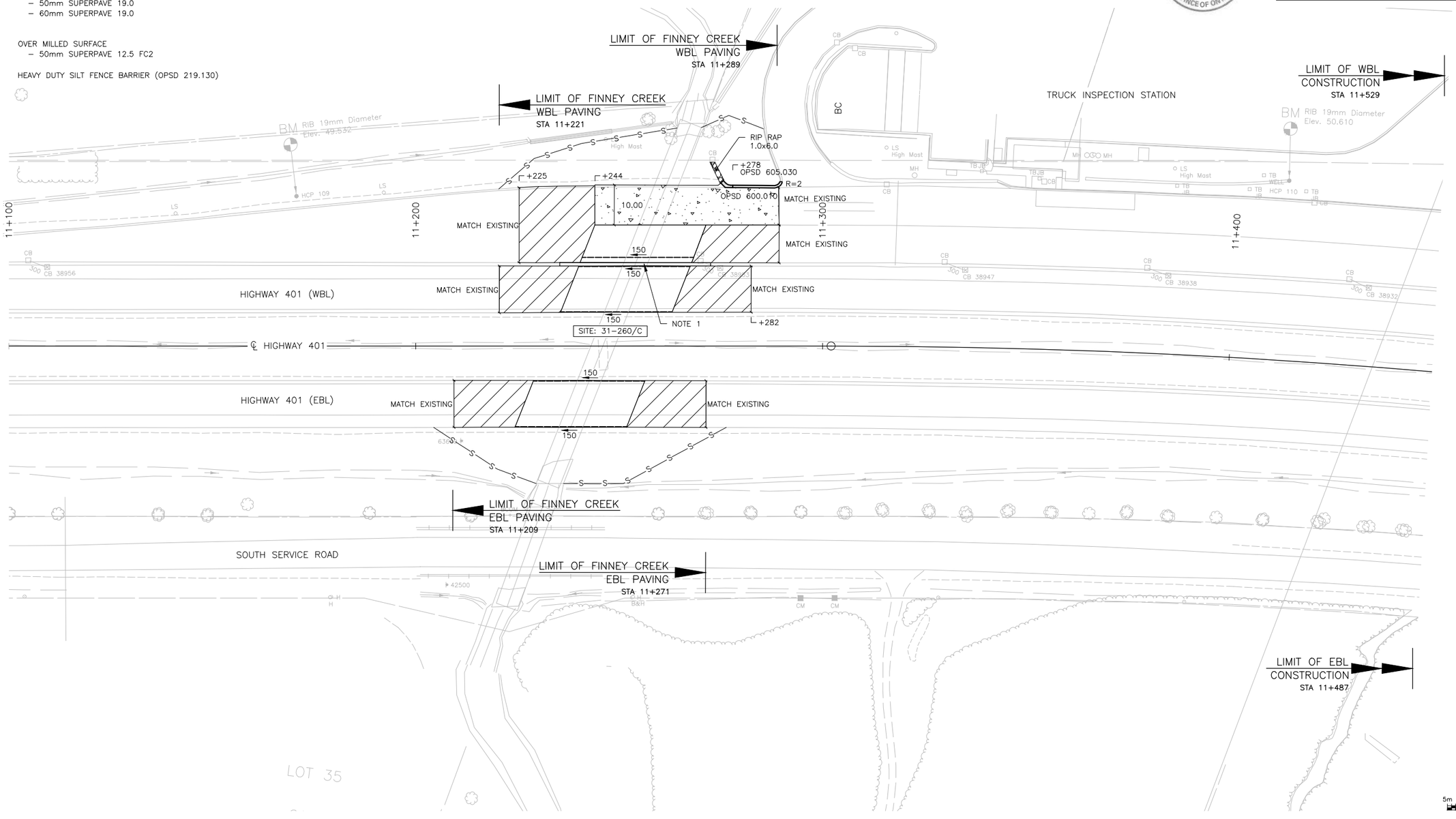

DATE PLOTTED: 1/16/2019 3:07:08 PM
FILE LOCATION: C:\projectwise\working_directory\active\10mcr\d0584061\4013-New Construction.dwg

SUPPLEMENTAL NEW CONSTRUCTION LEGEND

INTERCHANGE RAMPS

N-W CHANNELIZED, N/S-W, E-N/S, N/S-E & W-N/S RAMPS

RECONSTRUCTION
- 40mm Superpave 12.5 FC1
- 50mm Superpave 19.0
- 60mm Superpave 19.0

OVER MILLED SURFACE
- 40mm Superpave 12.5 FC1

PAVED SHOULDERS
- 40mm Superpave 12.5 FC1
- 50mm Superpave 19.0

—S— HEAVY DUTY SILT FENCE BARRIER (OPSD 219.130)

R ROCK FLOW CHECK DAM (OPSD 219.211)

FIBRE ROLL FLOW CHECK DAM (OPSD 219.191)

METRIC

LICENSED PROFESSIONAL ENGINEER
M.P. VAN HAREN
100185224
Jan 22/19
PROVINCE OF ONTARIO

PLATE No	
CONT No 2018-4008	
WP No 4013-11-00	
NEW CONSTRUCTION	SHEET 104
COUNTY ROAD 2/34 RAMPS	
DILLON CONSULTING	

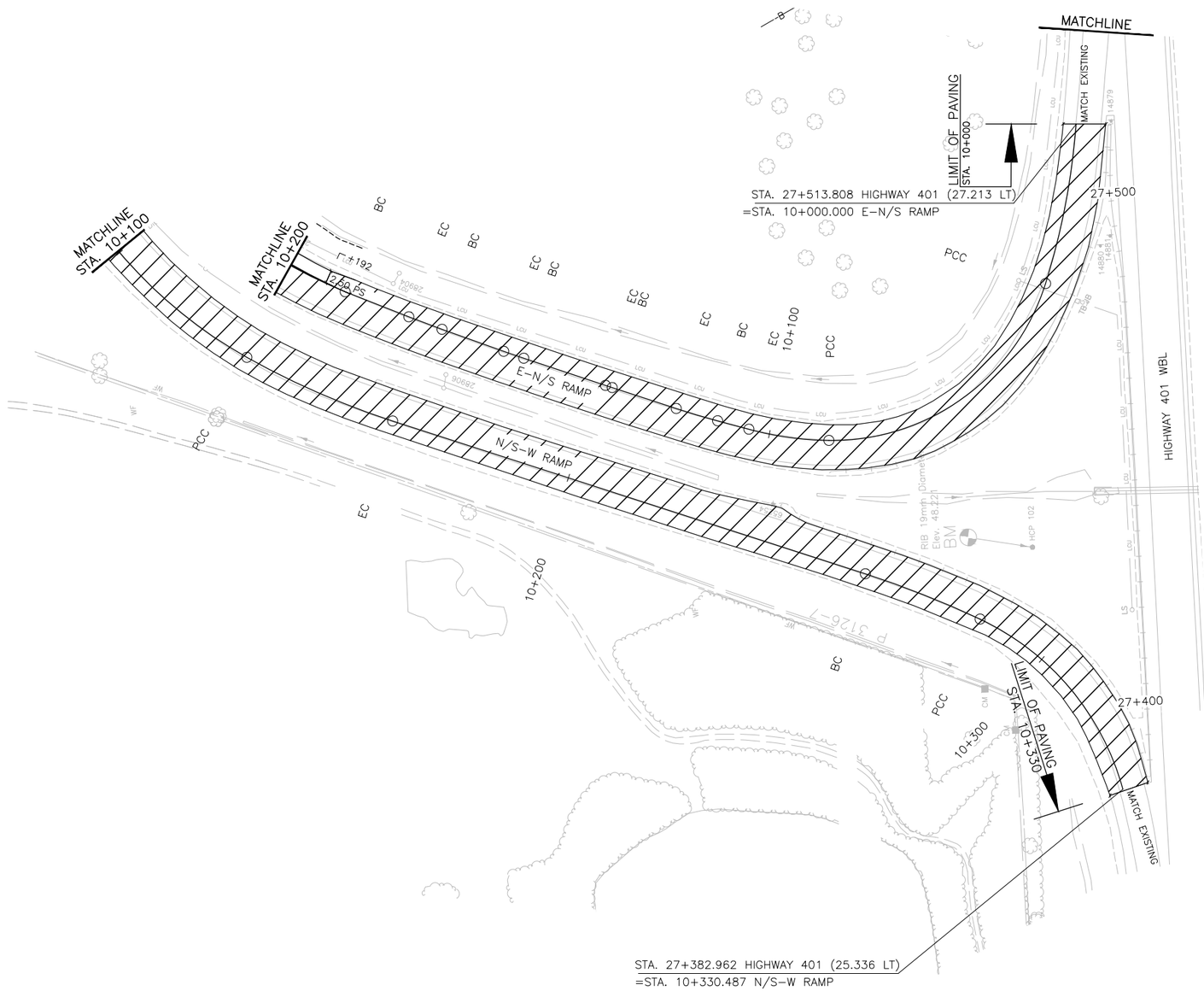

DATE PLOTTED: 1/16/2019 1:21:26 PM
FILE LOCATION: C:\projectwise\working_directory\active\10mcr\d0517910\4013-New Construction.dwg

METRIC

PLATE No

CONT No 2018-4008
WP No 4013-11-00

NEW CONSTRUCTION

SHEET 105

COUNTY ROAD 2/34 RAMPS

DILLON CONSULTING

LICENSED PROFESSIONAL ENGINEER
M.P. VAN HAREN
100185224
Jan 22/19
PROVINCE OF ONTARIO

SUPPLEMENTAL NEW CONSTRUCTION LEGEND

INTERCHANGE RAMPS

N-W CHANNELIZED, N/S-W, E-N/S, N/S-E & W-N/S RAMPS

RECONSTRUCTION
- 40mm Superpave 12.5 FC1
- 50mm Superpave 19.0
- 60mm Superpave 19.0

OVER MILLED SURFACE
- 40mm Superpave 12.5 FC1

PAVED SHOULDERS
- 40mm Superpave 12.5 FC1
- 50mm Superpave 19.0

—S— HEAVY DUTY SILT FENCE BARRIER (OPSD 219.130)

R ROCK FLOW CHECK DAM (OPSD 219.211)

FIBRE ROLL FLOW CHECK DAM (OPSD 219.191)

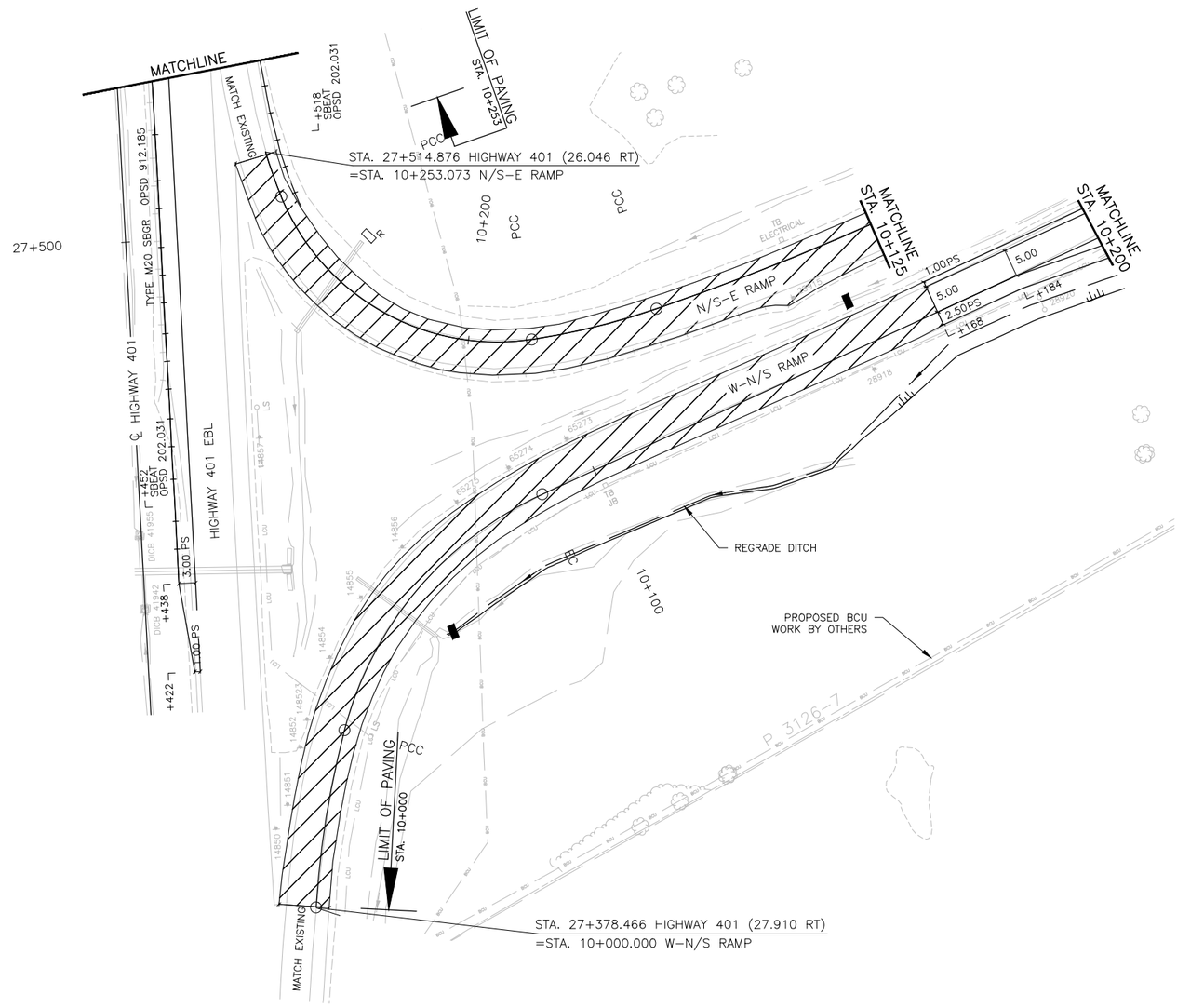

5m 0 10m
Horizontal

DATE PLOTTED: 1/21/2019 7:05:53 PM
FILE LOCATION: C:\projectwise\working_directory\active\10mcr\d0517910\4013-New Construction.dwg

METRIC

PLATE No
CONT No 2018–4008
WP No 4013–11–00

NEW CONSTRUCTION

COUNTY ROAD 2/34

STA. 9+550 TO STA. 9+850

SHEET 106

DILLON CONSULTING

LICENSED PROFESSIONAL ENGINEER
M.P. VAN HAREN
100185224
Jan 22/19
PROVINCE OF ONTARIO

SUPPLEMENTAL NEW CONSTRUCTION LEGEND

COUNTY ROAD 2/34

RECONSTRUCTION
- 40mm Superpave 12.5 FC1
- 50mm Superpave 19.0
- 60mm Superpave 19.0

OVER MILLED SURFACE
- 40mm Superpave 12.5 FC1

PAVED SHOULDERS
- 40mm Superpave 12.5 FC1
- 50mm Superpave 19.0

INTERCHANGE RAMPS

N–W CHANNELIZED, N/S–W, E–N/S, N/S–E & W–N/S RAMPS

RECONSTRUCTION
- 40mm Superpave 12.5 FC1
- 50mm Superpave 19.0
- 60mm Superpave 19.0

OVER MILLED SURFACE
- 40mm Superpave 12.5 FC1

PAVED SHOULDERS
- 40mm Superpave 12.5 FC1
- 50mm Superpave 19.0

MISCELLANEOUS
- 50mm Superpave 19.0

COUNTY ROAD 2

RECONSTRUCTION
- 40mm Superpave 12.5 FC1
- 50mm Superpave 19.0
- 60mm Superpave 19.0

OVER MILLED SURFACE
- 40mm Superpave 12.5 FC1

PAVED SHOULDERS
- 40mm Superpave 12.5 FC1
- 50mm Superpave 19.0

ENTRANCES

COMMERCIAL
- 40mm Superpave 12.5
- 50mm Superpave 19.0

RESIDENTIAL
- 50mm Superpave 12.5

SEED AND MATRIX

SOD

—S— HEAVY DUTY SILT FENCE BARRIER (OPSD 219.130)

R ROCK FLOW CHECK DAM (OPSD 219.211)

FIBRE ROLL FLOW CHECK DAM (OPSD 219.191)

GENERAL NOTES:

1. ALL CONCRETE SIDEWALK AS PER OPSD 310.020, EXCEPT WHERE NOTED.
2. ALL CONCRETE SIDEWALK RAMPS AT SIGNALIZED INTERSECTIONS AS PER OPSD 310.030.
3. ALL CONCRETE SIDEWALK AT DRIVEWAYS/ENTRANCES AS PER OPSD 310.050.
4. END SECTIONS OF CURB AND GUTTER WHERE NO TREATMENT IS SPECIFIED SHALL TERMINATE AS PER OPSD 608.010.
5. ALL CURB AND GUTTER AS PER OPSD 600.010, EXCEPT WHERE NOTED.
6. CHANNELIZED RIGHT TURN ISLAND CURB AND GUTTER BULLNOSES AS PER OPSD 606.010.
7. ALL SEWER AND CULVERT OUTLETS TO HAVE RIP RAP TREATMENT AS PER OPSD 810.010 TYPE 'B' UNLESS OTHERWISE NOTED.
8. ALL DITCH INLET/CATCH BASINS LOCATED IN GRASSED AREAS AS PER OPSD 810.020 UNLESS OTHERWISED NOTED.
9. ALL COMMERCIAL ENTRANCES AS PER OPSD 350.010 UNLESS OTHERWISE NOTED. SEE REMOVALS FOR OFFSET TO LIMIT OF PAVING.

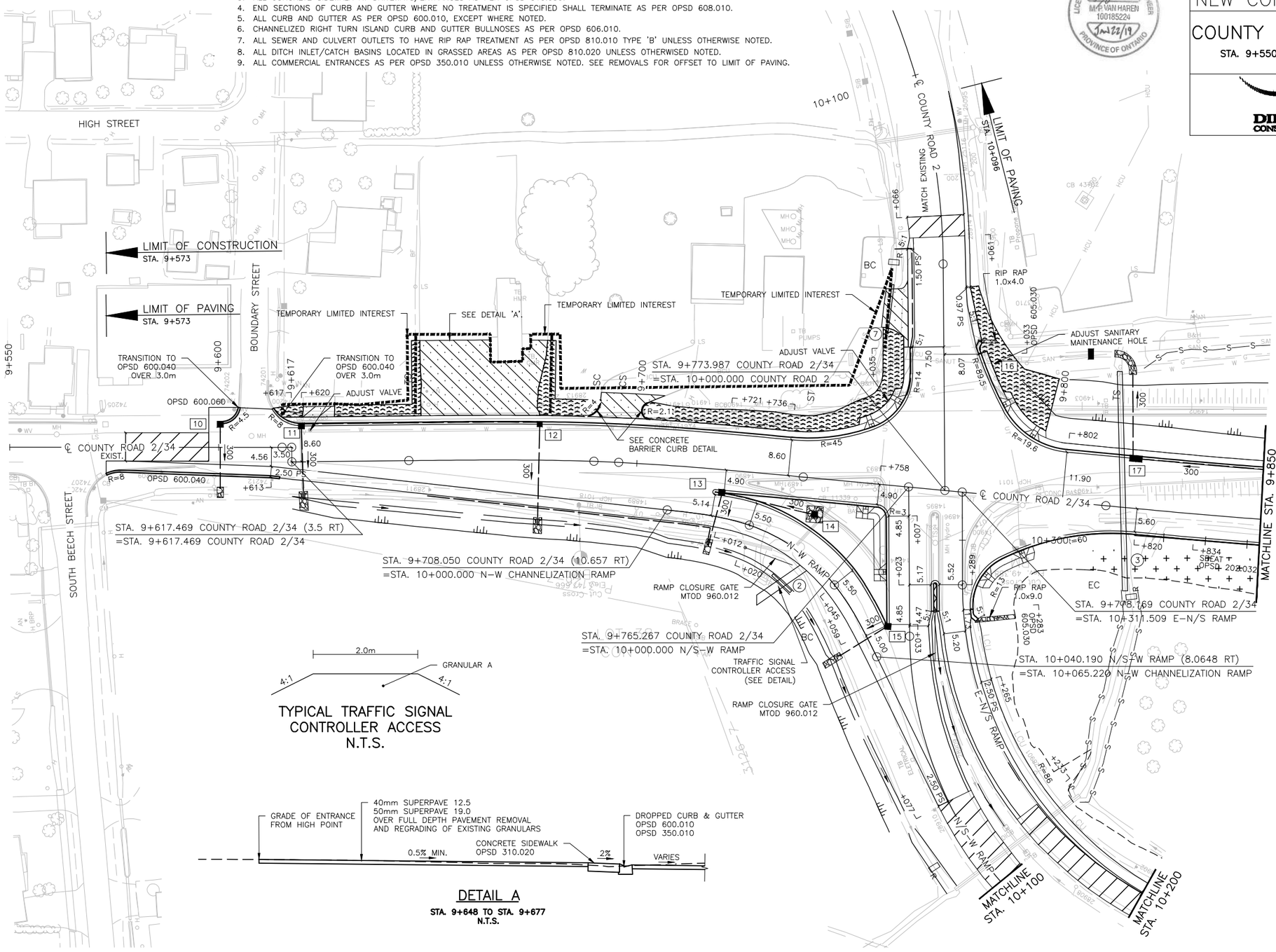

TYPICAL TRAFFIC SIGNAL CONTROLLER ACCESS
N.T.S.

DETAIL A

STA. 9+648 TO STA. 9+677
N.T.S.

DATE PLOTTED: 1/22/2019 9:26:34 AM
FILE LOCATION: C:\projectwise\working_directory\active\10mcr\d0517910\4013-New_Construction.dwg

SUPPLEMENTAL NEW CONSTRUCTION LEGEND

COUNTY ROAD 2/34

RECONSTRUCTION
- 40mm Superpave 12.5 FC1
- 50mm Superpave 19.0
- 60mm Superpave 19.0

OVER MILLED SURFACE
- 40mm Superpave 12.5 FC1

PAVED SHOULDERS
- 40mm Superpave 12.5 FC1
- 50mm Superpave 19.0

SEED AND MATRIX

—S— HEAVY DUTY SILT FENCE BARRIER (OPSD 219.130)

—B— BARRIER FOR TREE PROTECTION (OPSD 220.010)

FIBRE ROLL FLOW CHECK DAM (OPSD 219.191)

METRIC

LICENSED PROFESSIONAL ENGINEER
M.P. VAN HAREN
100185224
Jan 22/19
PROVINCE OF ONTARIO

PLATE No	
CONT No 2018–4008	
WP No 4013–11–00	
NEW CONSTRUCTION	SHEET 107
COUNTY ROAD 2/34	
STA. 9+850 TO STA. 10+150	
DILLON CONSULTING	

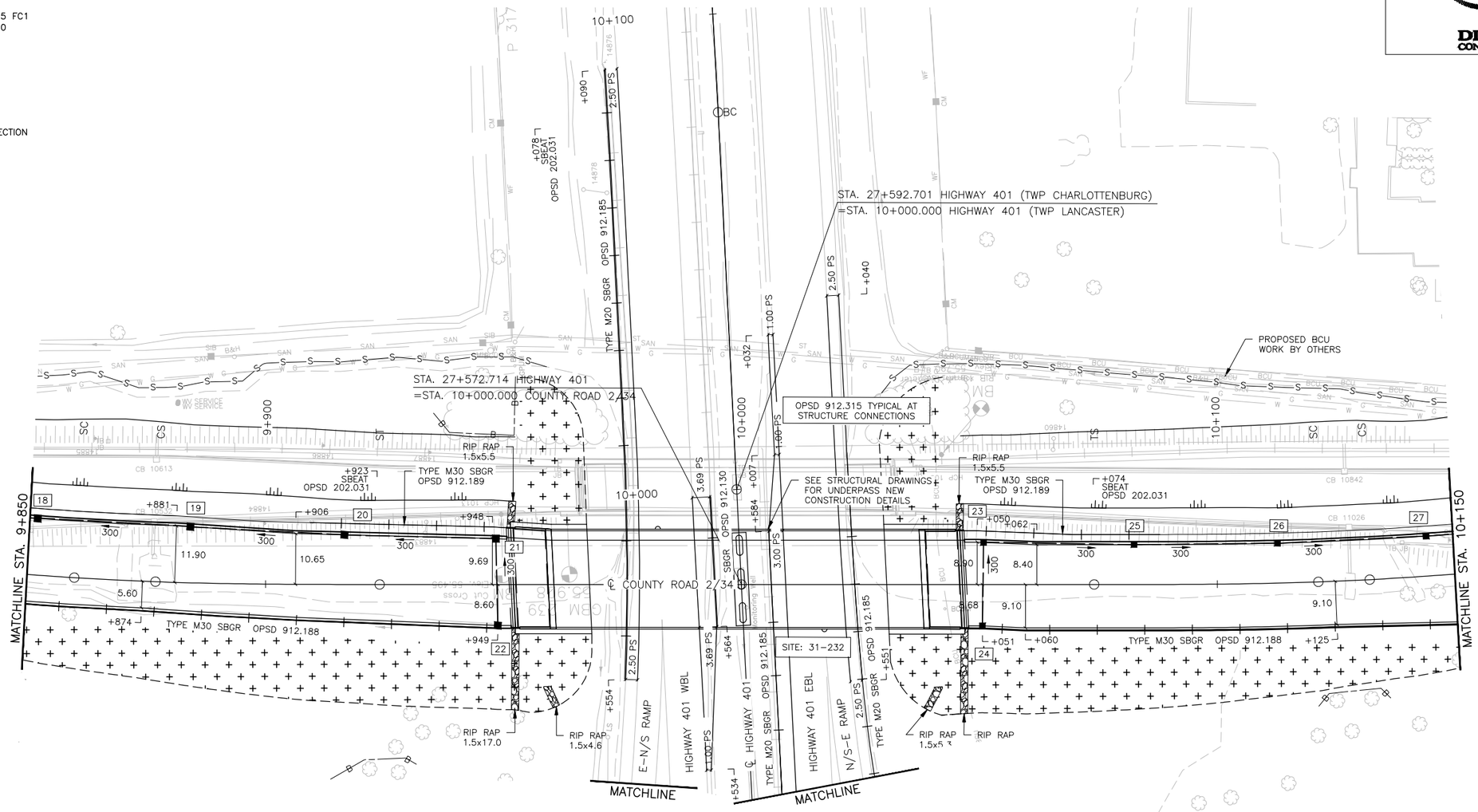

DATE PLOTTED: 1/21/2019 6:11:50 PM
FILE LOCATION: C:\projectwise\working directory\active\10mcr\d0517910\4013-New Construction.dwg

METRIC

PLATE No

CONT No 2018–4008

WP No 4013–11–00

NEW CONSTRUCTION

COUNTY ROAD 2/34

STA.10+150 TO STA. 10+500

SHEET 108

DILLON CONSULTING

LICENSED PROFESSIONAL ENGINEER M.P. VAN HAREN 100185224 Jan 22/19 PROVINCE OF ONTARIO

SUPPLEMENTAL NEW CONSTRUCTION LEGEND

COUNTY ROAD 2/34

RECONSTRUCTION
- 40mm Superpave 12.5 FC1
- 50mm Superpave 19.0
- 60mm Superpave 19.0

OVER MILLED SURFACE
- 40mm Superpave 12.5 FC1

PAVED SHOULDERS
- 40mm Superpave 12.5 FC1
- 50mm Superpave 19.0

PAVED SHOULDER
- 50mm Superpave 19.0
- 50mm Superpave 19.0

SOUTH SERVICE ROAD

RECONSTRUCTION
- 40mm Superpave 12.5 FC1
- 50mm Superpave 19.0
- 60mm Superpave 19.0

OVER MILLED SURFACE
- 40mm Superpave 12.5 FC1

PAVED SHOULDERS
- 40mm Superpave 12.5 FC1
- 50mm Superpave 19.0

ENTRANCES

COMMERCIAL
- 40mm Superpave 12.5
- 50mm Superpave 19.0

INTERCHANGE RAMPS

N–W CHANNELIZED, N/S–W, E–N/S, N/S–E & W–N/S RAMPS

RECONSTRUCTION
- 40mm Superpave 12.5 FC1
- 50mm Superpave 19.0
- 60mm Superpave 19.0

OVER MILLED SURFACE
- 40mm Superpave 12.5 FC1

PAVED SHOULDERS
- 40mm Superpave 12.5 FC1
- 50mm Superpave 19.0

MISCELLANEOUS
- 50mm Superpave 19.0

SEED AND MATRIX

SOD

—S— HEAVY DUTY SILT FENCE BARRIER (OPSD 219.130)

—B— BARRIER FOR TREE PROTECTION (OPSD 220.010)

R ROCK FLOW CHECK DAM (OPSD 219.211)

FIBRE ROLL FLOW CHECK DAM (OPSD 219.191)

NOTES:

1. DETAILS OF N–E CHANNELIZATION RAMP AND ISLAND ARE PROVIDED ELSEWHERE IN CONTRACT.

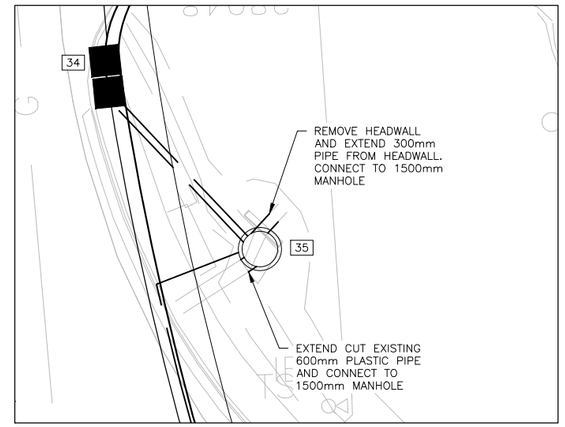

MANHOLE CONNECTION DETAIL

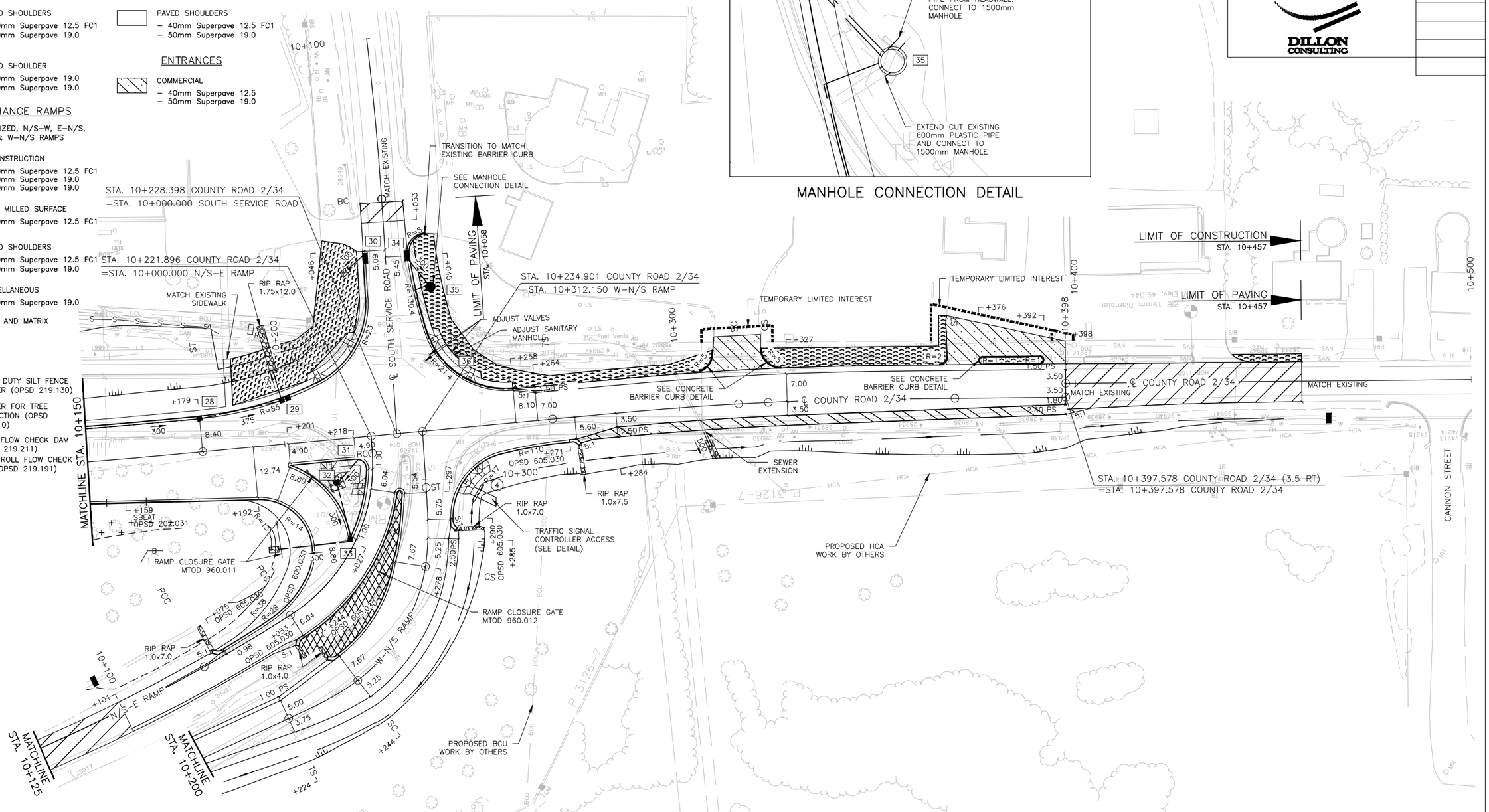

DATE PLOTTED: 1/21/2019 8:21:11 PM
FILE LOCATION: C:\projectwise\working_directory\active\10mcr\d0517910\4013-New Construction.dwg

METRIC

PROFILES – SUPPLEMENTAL LEGEND

- DITCH LEFT
- DITCH RIGHT
- SUBGRADE

LICENSED PROFESSIONAL ENGINEER
M.P. VAN HAREN
100185224
Jan 22/19
PROVINCE OF ONTARIO

PLATE No
CONT No 2018–4008
WP No 4013–11–00

PROFILES

HIGHWAY 401
STA. 26+500 TO STA. 26+850

SHEET
109

DILLON CONSULTING

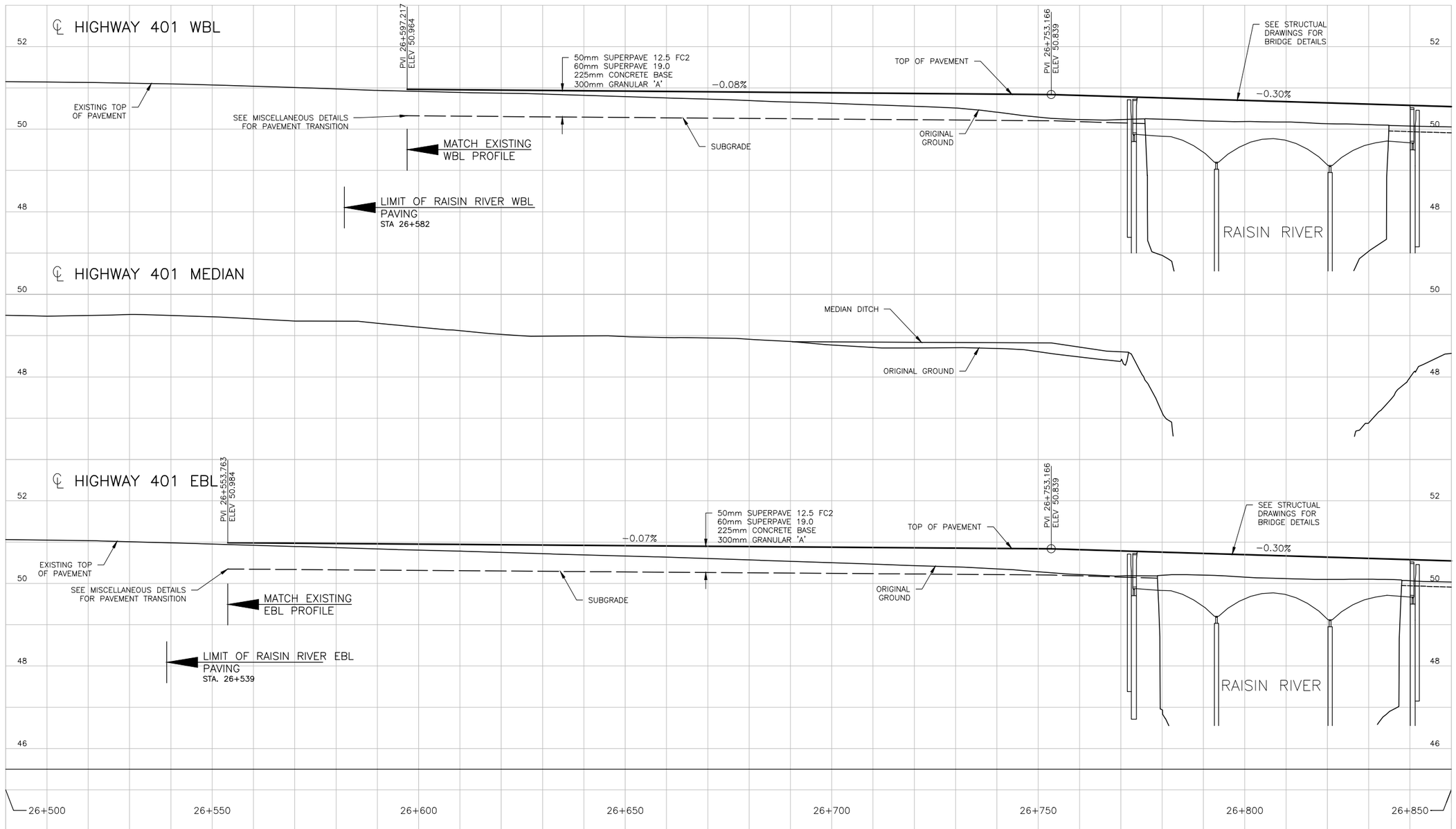

SCALE

5m 0 10m
Horizontal

0.5m 0 1m
Vertical

DATE PLOTTED: 1/16/2019 1:24:54 PM
FILE LOCATION: C:\projectwise\working directory\active\10mcr\d0517908\4013-11-00 Profiles.dwg

HIGHWAY 401 WBL
26+854

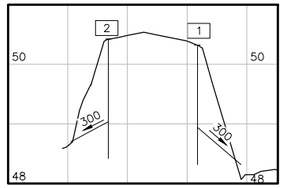

HIGHWAY 401 EBL
26+854

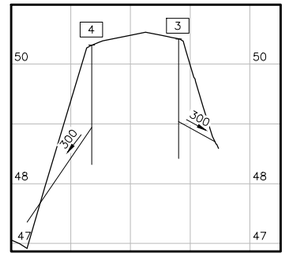

METRIC

PROFILES – SUPPLEMENTAL LEGEND

- DITCH LEFT
- DITCH RIGHT
- SUBGRADE

LICENSED PROFESSIONAL ENGINEER
M.P. VAN HAREN
100185224
Jan 22/19
PROVINCE OF ONTARIO

PLATE No
CONT No 2018–4008
WP No 4013–11–00

PROFILES

HIGHWAY 401
STA. 26+850 TO STA. 27+200

DILLON CONSULTING

SHEET
110

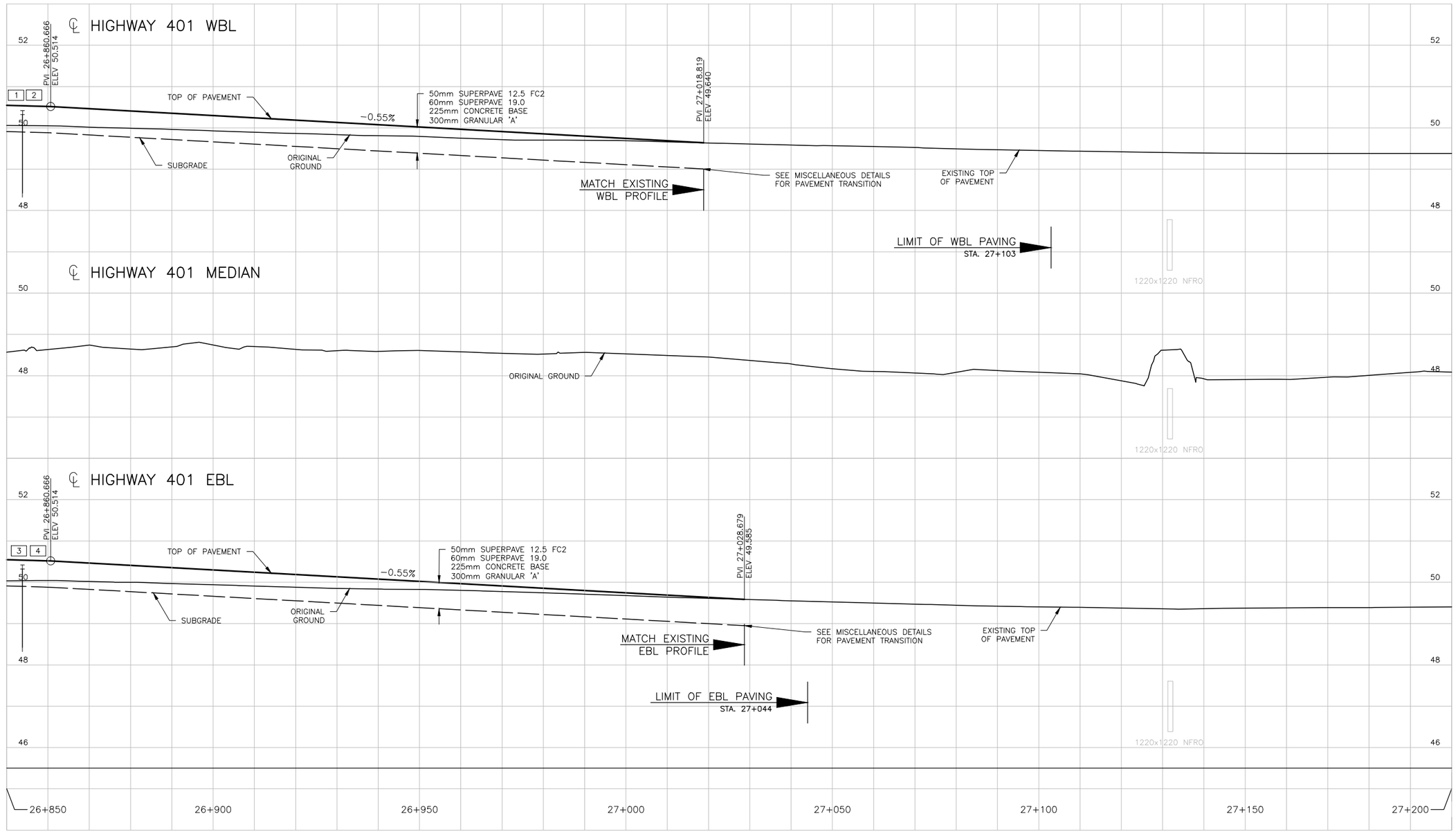

SCALE

5m 0 10m
Horizontal

0.5m 0 1m
Vertical

DATE PLOTTED: 1/16/2019 1:26:17 PM
FILE LOCATION: C:\projectwise\working directory\active\10mcr\d051790\4013-11-00 Profiles.dwg

NOTES:

1. PROFILE CONTROL TO BE OFFSET 3.50m (Lt) NORTH OF STA. 9+692.709 AND SOUTH OF STA. 10+318.715.
2. ALIGNMENT TO BE OFFSET 3.50m (Lt) NORTH AND SOUTH OF FULL DEPTH LIMIT OF RECONSTRUCTION.

COUNTY ROAD 2/34
9+600

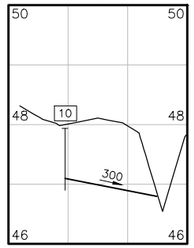

COUNTY ROAD 2/34
9+620

COUNTY ROAD 2/34
9+677

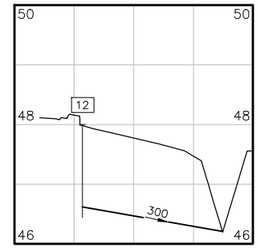

LICENSED PROFESSIONAL ENGINEER
MICHAEL VAN HAREN
100185224
Jan 22/19
PROVINCE OF ONTARIO

METRIC

PROFILES – SUPPLEMENTAL LEGEND

- DITCH LEFT
- DITCH RIGHT
- SUBGRADE

PLATE No
CONT No 2018–4008
WP No 4013–11–00

PROFILES

COUNTY ROAD 2/34

STA. 9+550 TO STA. 9+850

DILLON CONSULTING

SHEET
111

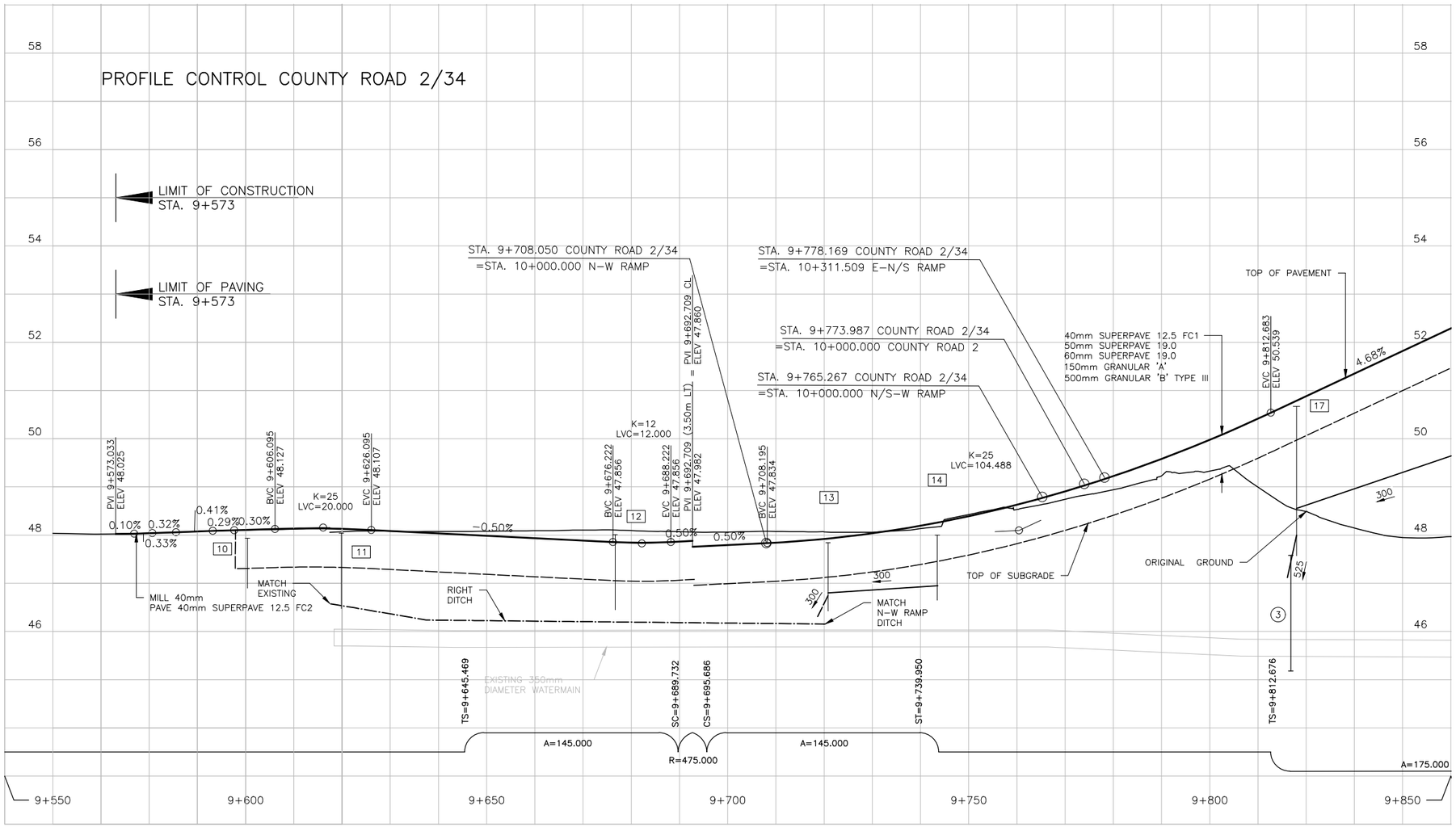

SCALE

5m 0 10m
Horizontal

0.5m 0 1m
Vertical

DATE PLOTTED: 1/21/2019 6:41:38 PM
FILE LOCATION: C:\projectwise\working directory\active\10mcr\d0517910\4013-Profiles.dwg

METRIC

PROFILES – SUPPLEMENTAL LEGEND

- DITCH LEFT
- DITCH RIGHT
- SUBGRADE

LICENSED PROFESSIONAL ENGINEER
M.P. VAN HAREN
100185224
Jan 22/19
PROVINCE OF ONTARIO

PLATE No

CONT No 2018–4008
WP No 4013–11–00

PROFILES

SHEET 112

COUNTY ROAD 2/34

STA. 9+850 TO STA. 10+150

DILLON CONSULTING

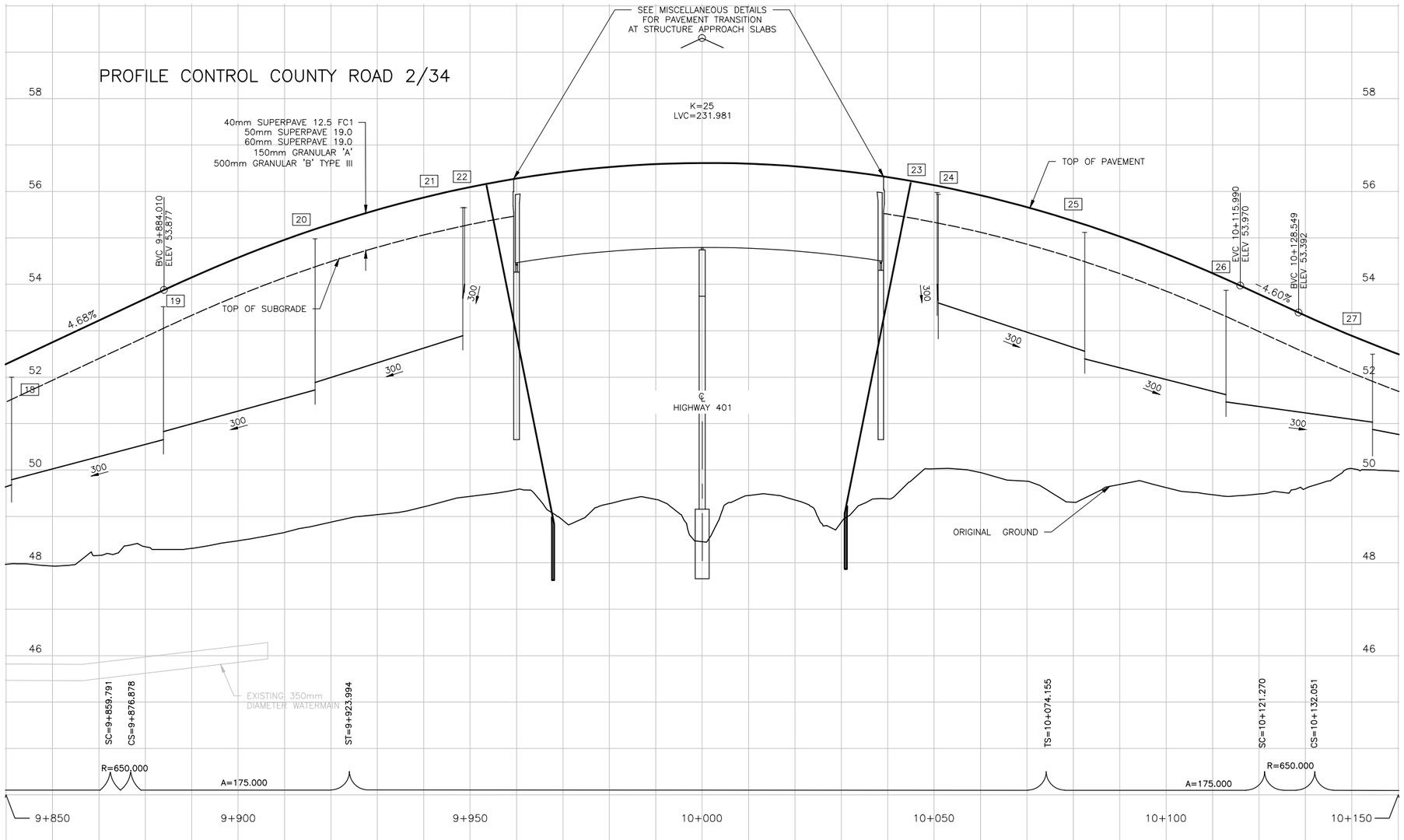

SCALE

5m 0 10m
Horizontal

0.5m 0 1m
Vertical

DATE PLOTTED: 1/16/2019 3:42:41 PM
FILE LOCATION: C:\projectwise\working directory\active\10mcr\d0517910\4013-Profiles.dwg

METRIC

PROFILES – SUPPLEMENTAL LEGEND

- DITCH LEFT
- DITCH RIGHT
- SUBGRADE

LICENSED PROFESSIONAL ENGINEER
M.P. VAN HAREN
100185224
Jan 22/19
PROVINCE OF ONTARIO

PLATE No
CONT No 2018–4008
WP No 4013–11–00

PROFILES

SHEET 113

COUNTY ROAD 2/34
STA. 10+150 TO STA. 10+500

DILLON CONSULTING

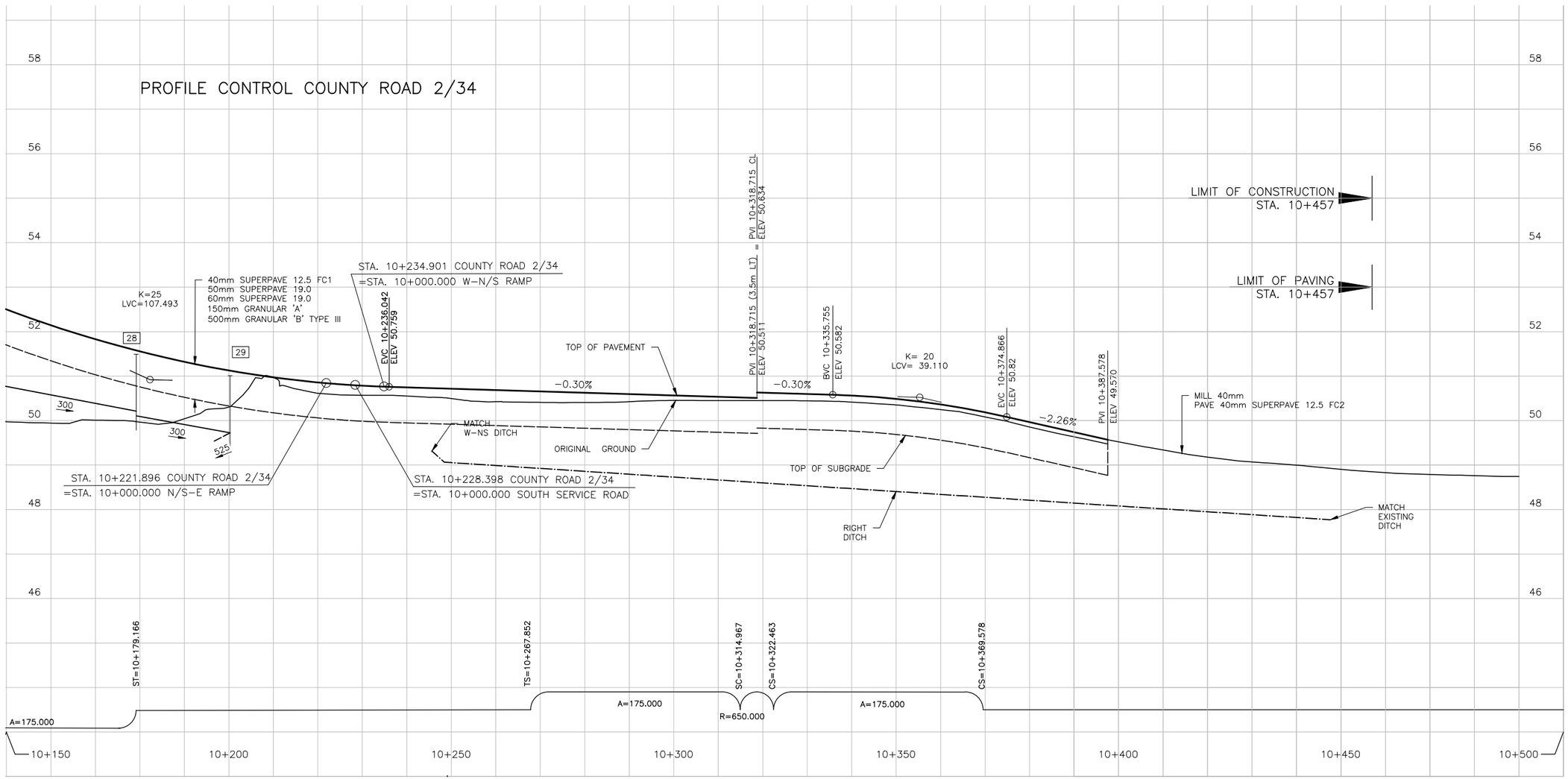

SCALE

5m 0 10m
Horizontal

0.5m 0 1m
Vertical

DATE PLOTTED: 1/16/2019 1:29:19 PM
FILE LOCATION: C:\projectwise\working directory\active\10mca\d0517910\4013-Profiles.dwg

METRIC

PROFILES – SUPPLEMENTAL LEGEND

- DITCH LEFT
- DITCH RIGHT
- SUBGRADE

LICENSED PROFESSIONAL ENGINEER
M.P. VAN HAREN
100185224
Jan 22/19
PROVINCE OF ONTARIO

PLATE No
CONT No 2018–4008
WP No 4013–11–00

PROFILES

SHEET 114

W–N/S RAMP, COUNTY ROAD 2 & SOUTH SERVICE ROAD

DILLON CONSULTING

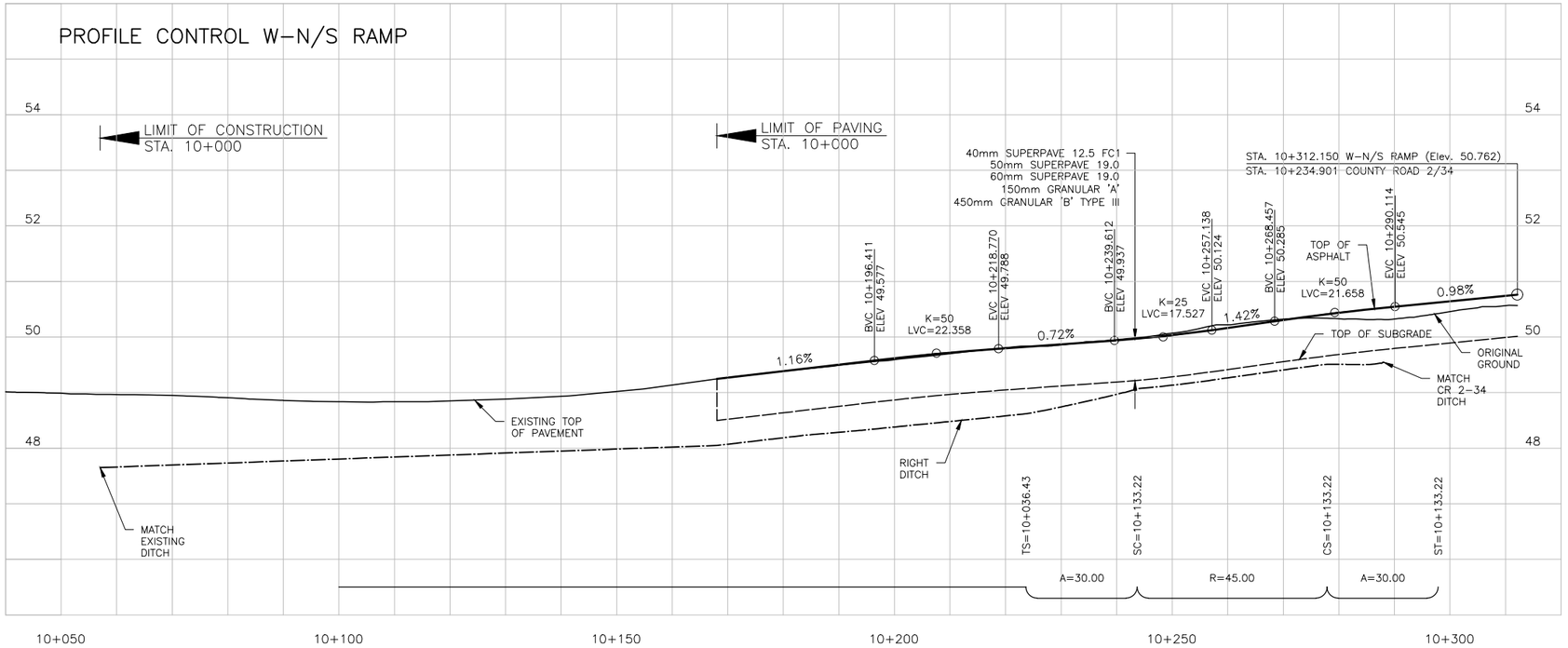

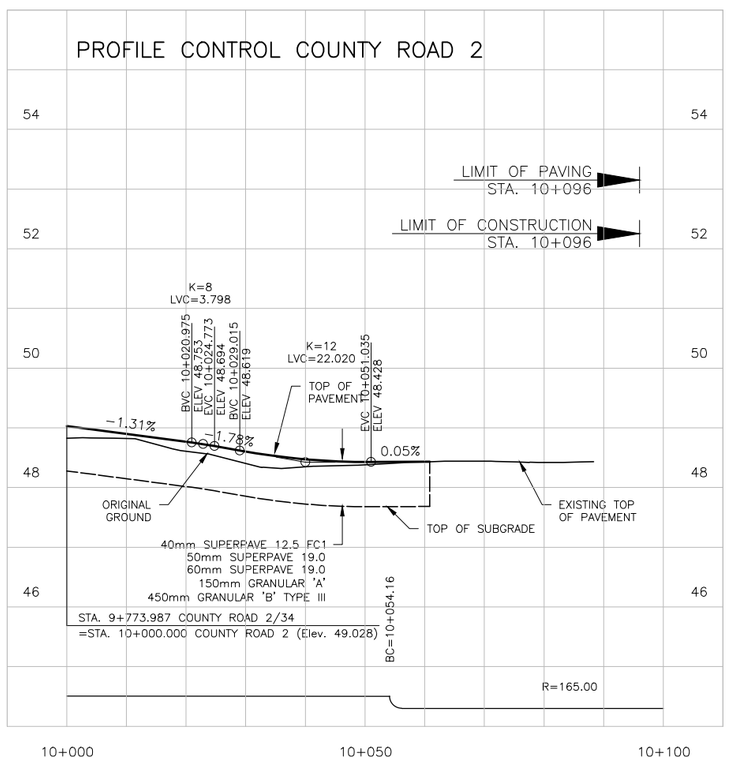

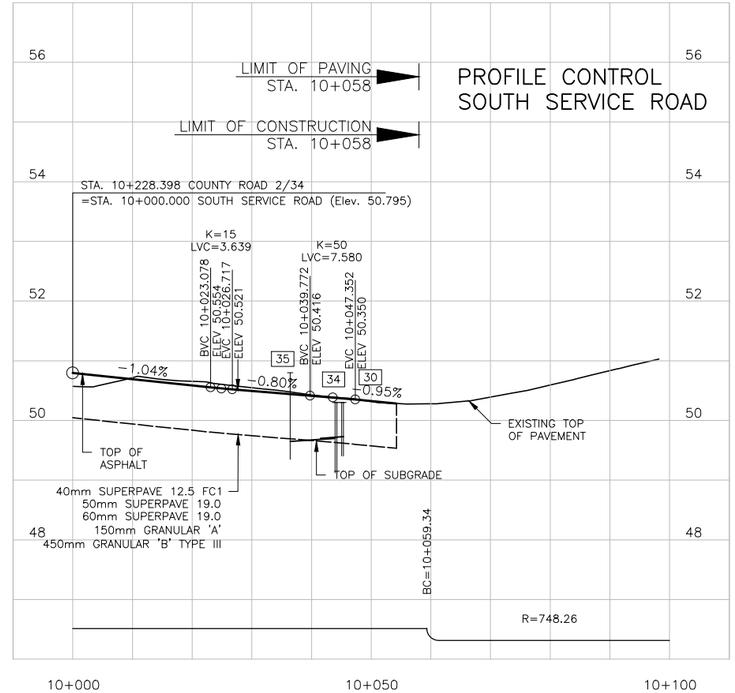

SCALE

5m 0 10m
Horizontal

0.5m 0 1m
Vertical

DATE PLOTTED: 1/16/2019 1:29:28 PM
FILE LOCATION: C:\projectwise\working directory\active\10mcr\d0517910\4013-Profiles.dwg

METRIC

PROFILES – SUPPLEMENTAL LEGEND

- DITCH LEFT
- DITCH RIGHT
- SUBGRADE

LICENSED PROFESSIONAL ENGINEER
M.P. VAN HAREN
100185224
Jan 22/19
PROVINCE OF ONTARIO

PLATE No
CONT No 2018–4008
WP No 4013–11–00

PROFILES

N/S–W, N–W, E–N/S & N/S–E RAMPS

DILLON CONSULTING

SHEET 115

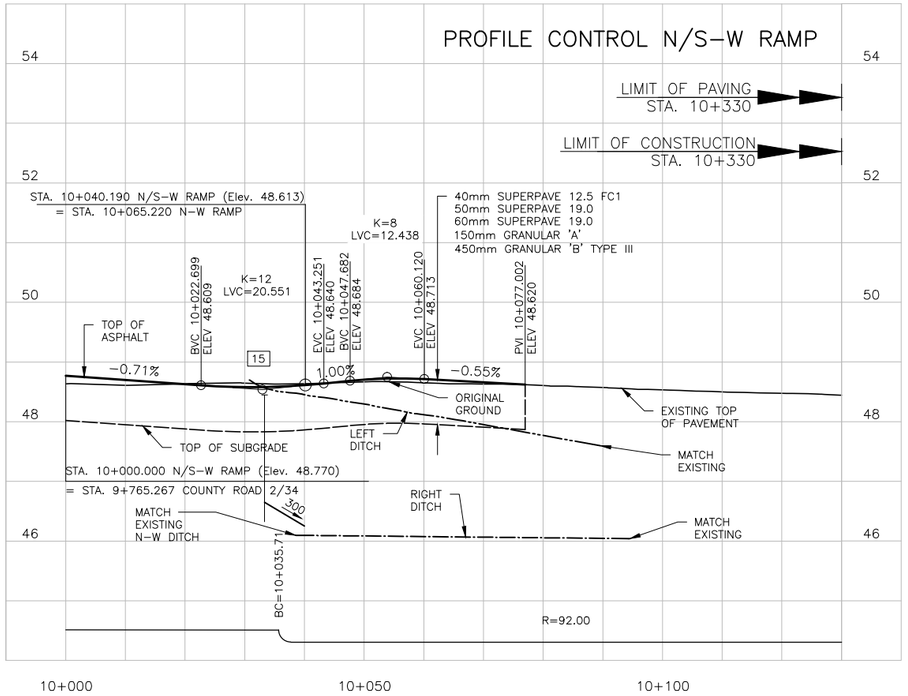

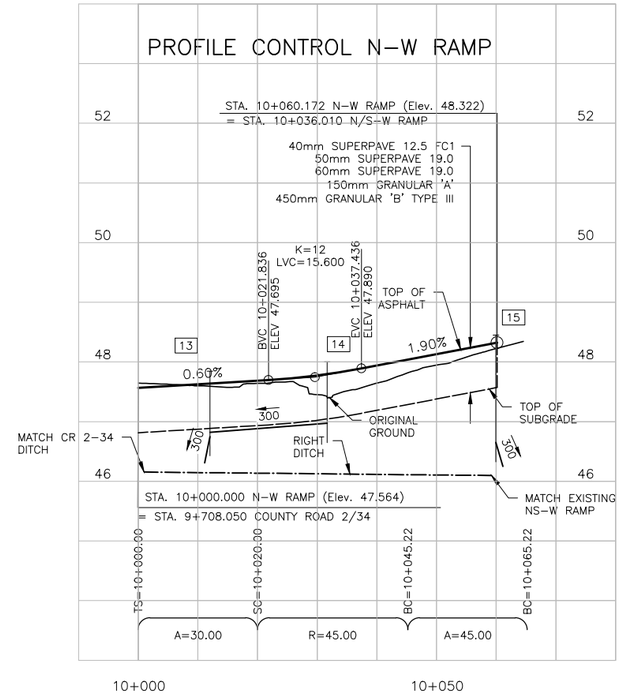

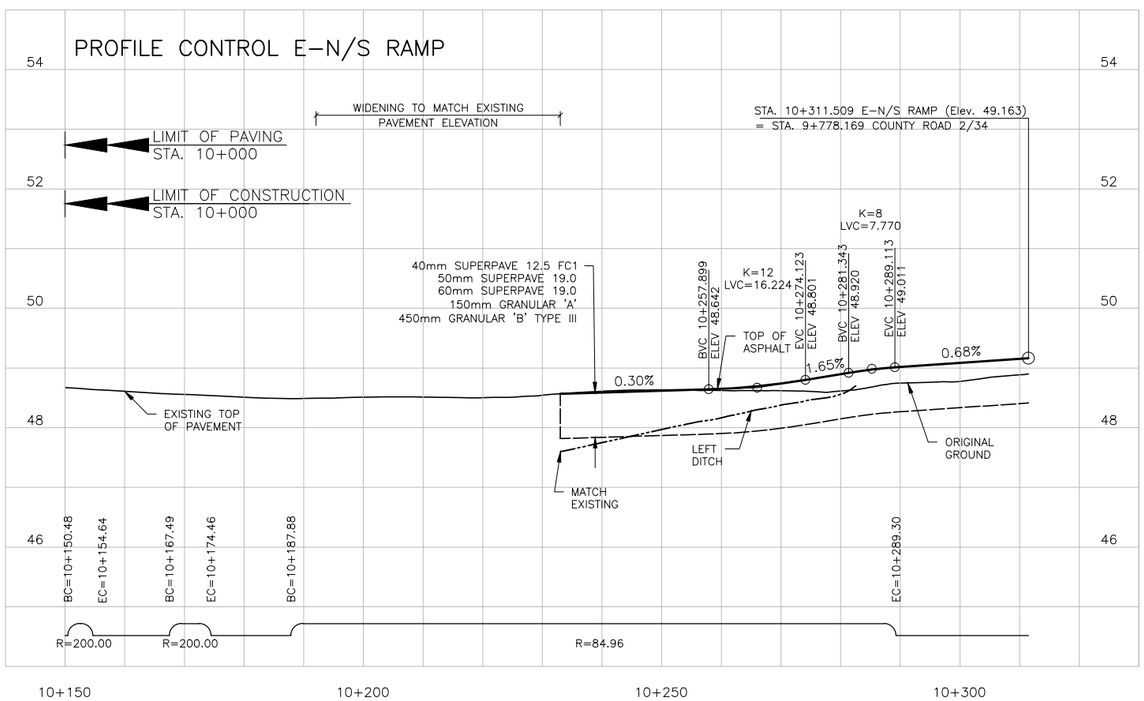

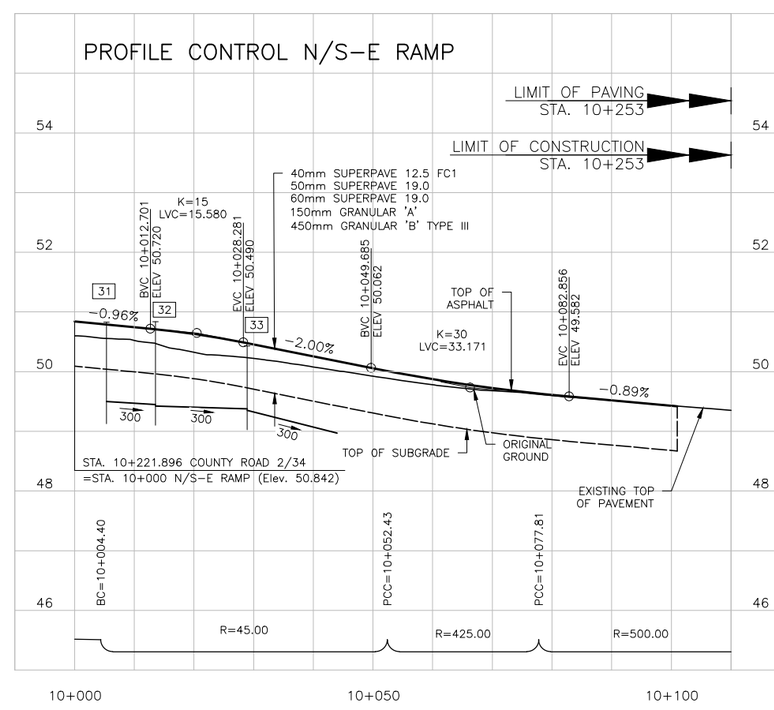

SCALE

5m 0 10m
Horizontal

0.5m 0 1m
Vertical

DATE PLOTTED: 1/22/2019 9:28:53 AM
FILE LOCATION: C:\projectwise\working_directory\active\10mcr\d0517910\4013-Profiles.dwg

METRIC

PLATE No

CONT No 2018-4008
WP No 4013-11-00

PAVEMENT MARKINGS

SHEET 116

HIGHWAY 401

STA. 23+700 TO STA. 25+550

DILLON CONSULTING

LICENSED PROFESSIONAL ENGINEER
M.P. VAN HAREN
100185224
Jan 22/19
PROVINCE OF ONTARIO

LEGEND
PAVEMENT MARKINGS

1	SOLID YELLOW,10cm
2	SOLID DOUBLE YELLOW,10cm
3	363 BROKEN YELLOW,10cm
4	SOLID YELLOW,20cm
5	SOLID WHITE,10cm
6	333 BROKEN WHITE,10cm
7	363 BROKEN WHITE,10cm
8	393 BROKEN WHITE,10cm
9	SOLID WHITE,20cm
10	111 BROKEN WHITE,20cm
11	333 BROKEN WHITE,20cm
12	333 BROKEN WHITE,30cm
13	SOLID WHITE,30cm
14	SOLID WHITE,45cm
15	SOLID WHITE,60cm
20	SYMBOLS
] [	LIMITS OF MARKINGS

NOTES:

1. REINSTATE EXISTING PAVEMENT MARKINGS FROM STATION 23+800 TO 24+750
2. 333, 363, 393, DENOTES PAVEMENT MARKING SPACING (ie., 3m LINE, 3m GAP, 3m LINE)
3. USE (1) TO DENOTE PAVEMENT MARKING
4. USE [1] TO DENOTE PAVEMENT MARKING, TEMPORARY
5. USE ⚠ TO DENOTE PAVEMENT MARKING, TEMPORARY–REMOVABLE
6. USE ⟨1⟩ TO DENOTE PAVEMENT MARKING, DURABLE

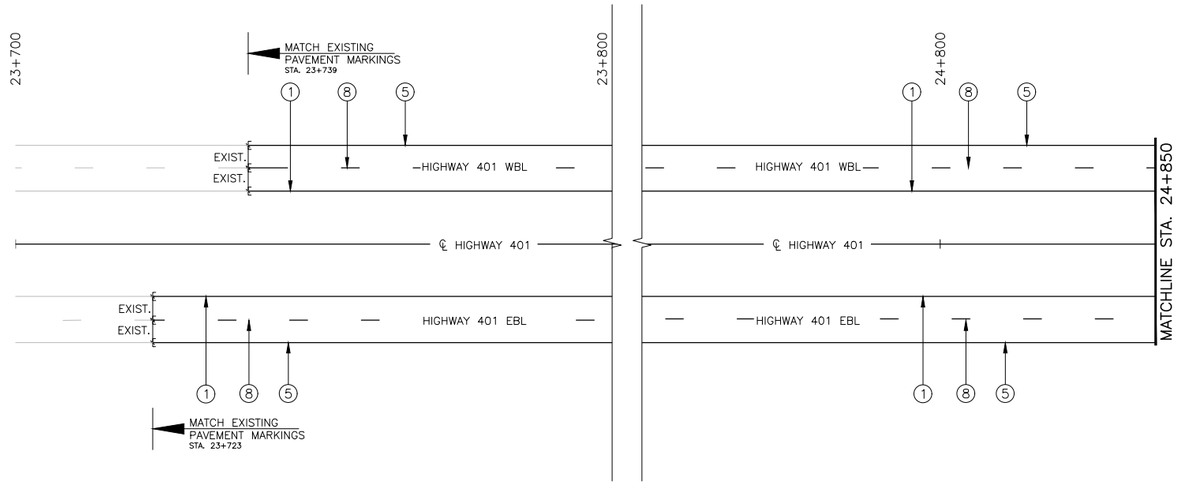

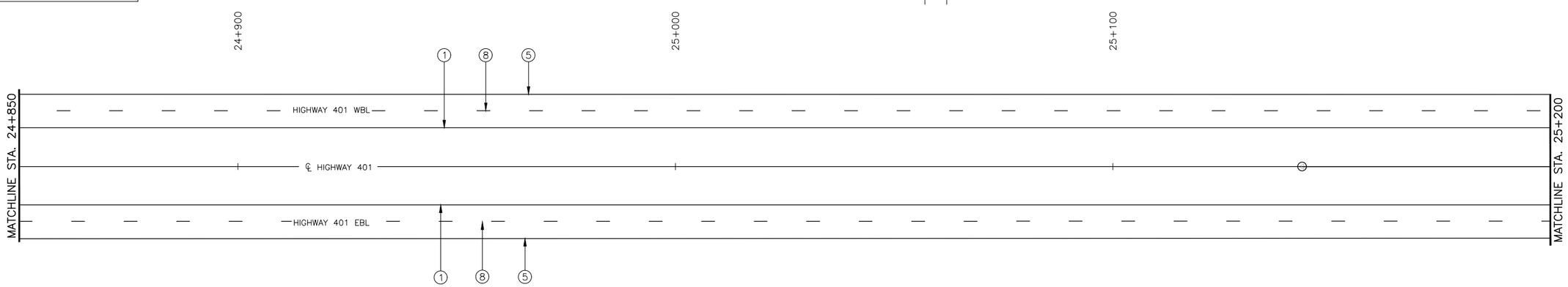

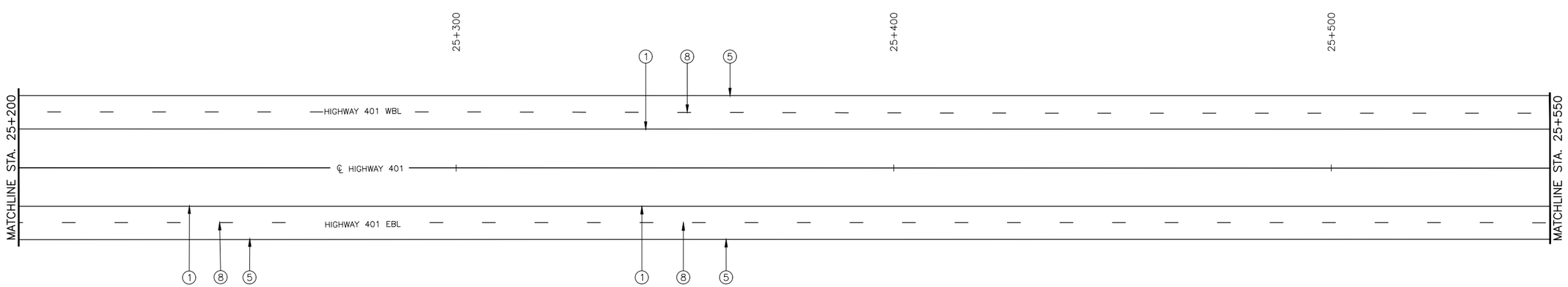

5m 0 10m
Horizontal

DATE PLOTTED: 1/16/2019 1:33:04 PM
FILE LOCATION: C:\projectwise\working_directory\active\10mcr\d0517908\4013-11-00 Pavement Markings.dwg

METRIC

PLATE No

CONT No 2018-4008

WP No 4013-11-00

PAVEMENT MARKINGS

SHEET 117

HIGHWAY 401

STA. 25+550 TO STA. 26+250

DILLON CONSULTING

LICENSED PROFESSIONAL ENGINEER
M.P. VAN HAREN
100185224
Jan 22/19
PROVINCE OF ONTARIO

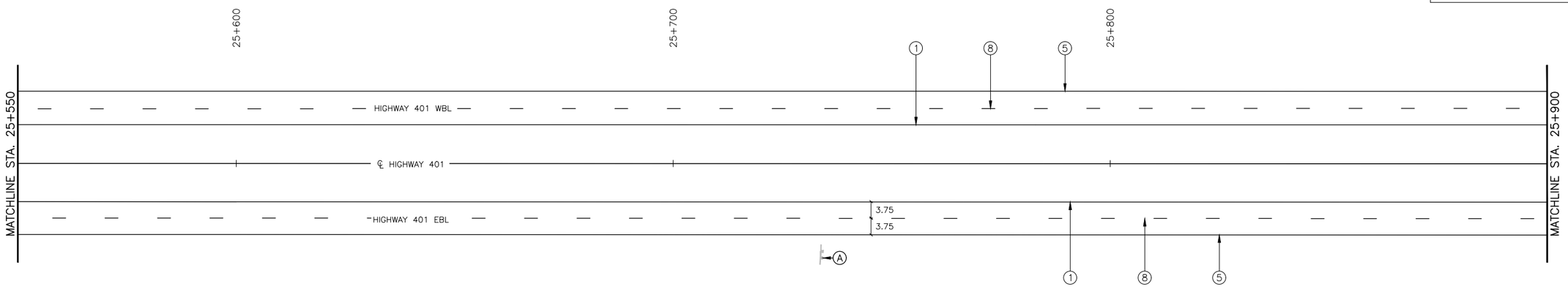

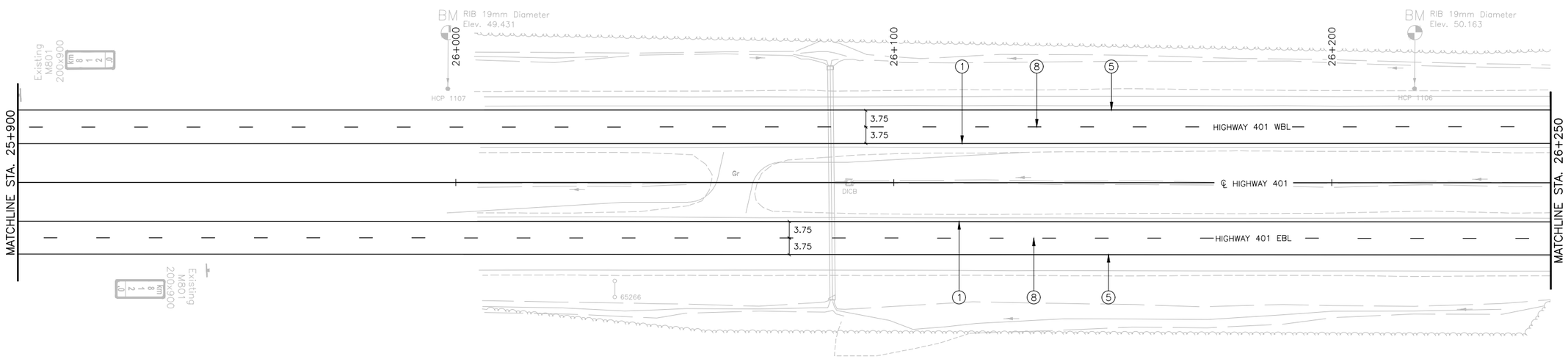

5m 0 10m
Horizontal

DATE PLOTTED: 1/21/2019 6:16:33 PM
FILE LOCATION: C:\projectwise\working_directory\active\10mcr\d0517908\4013-11-00 Pavement Markings.dwg

METRIC

PLATE No

CONT No 2018–4008

WP No 4013–11–00

PAVEMENT MARKINGS

SHEET 118

HIGHWAY 401

STA. 26+250 TO STA. 26+950

DILLON CONSULTING

LICENSED PROFESSIONAL ENGINEER M.P. VAN HAREN 100185224 JAN 22/19 PROVINCE OF ONTARIO

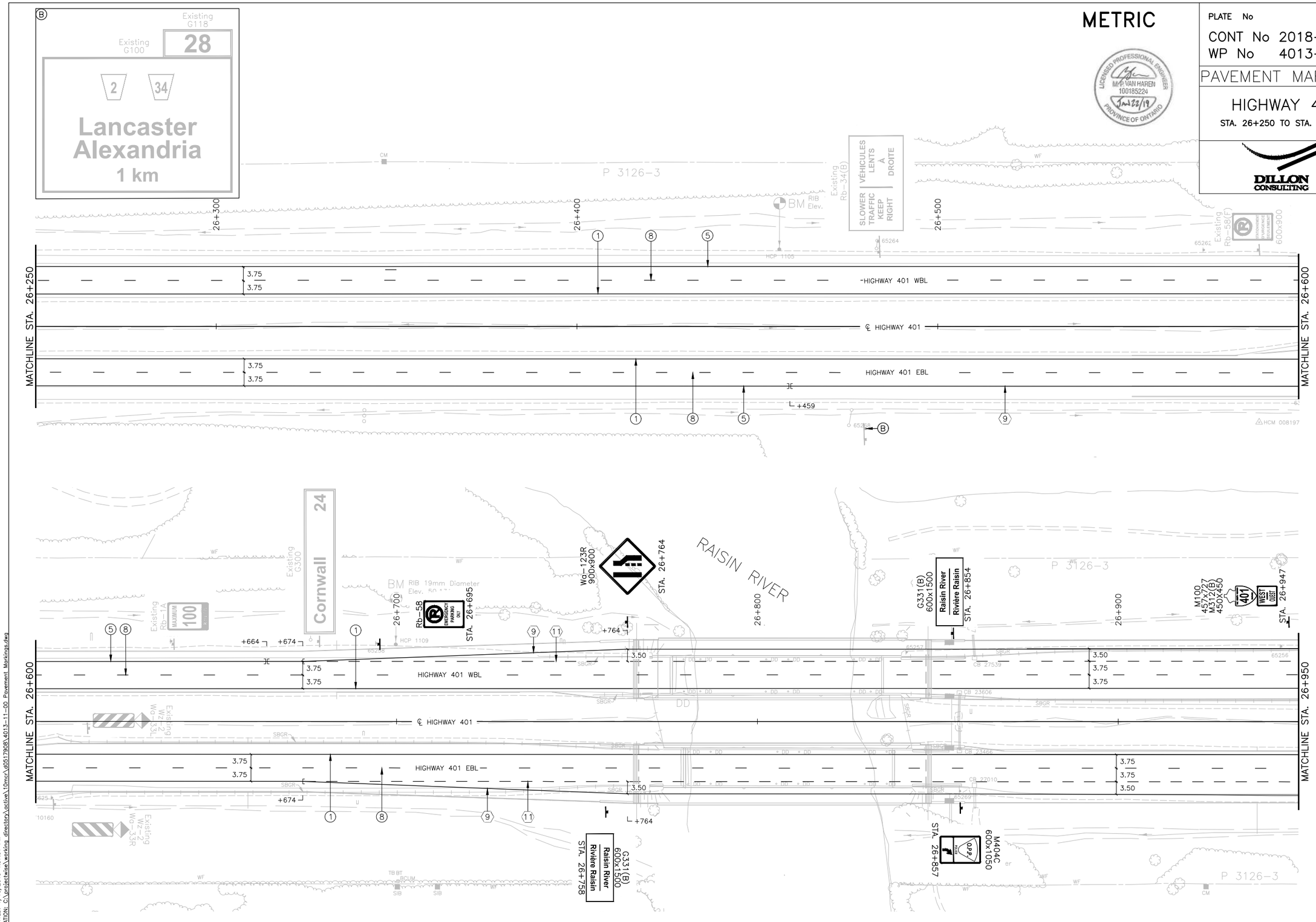

DATE PLOTTED: 1/16/2019 1:37:01 PM

FILE LOCATION: C:\projectwise\working_directory\active\10mcr\d0517908\4013-11-00 Pavement Markings.dwg

METRIC

PLATE No

CONT No 2018-4008

WP No 4013-11-00

PAVEMENT MARKINGS

SHEET 119

HIGHWAY 401

STA. 26+950 TO STA. 10+050

DILLON CONSULTING

LICENSED PROFESSIONAL ENGINEER M.P. VAN HAREN 100185224 Jan 22/19 PROVINCE OF ONTARIO

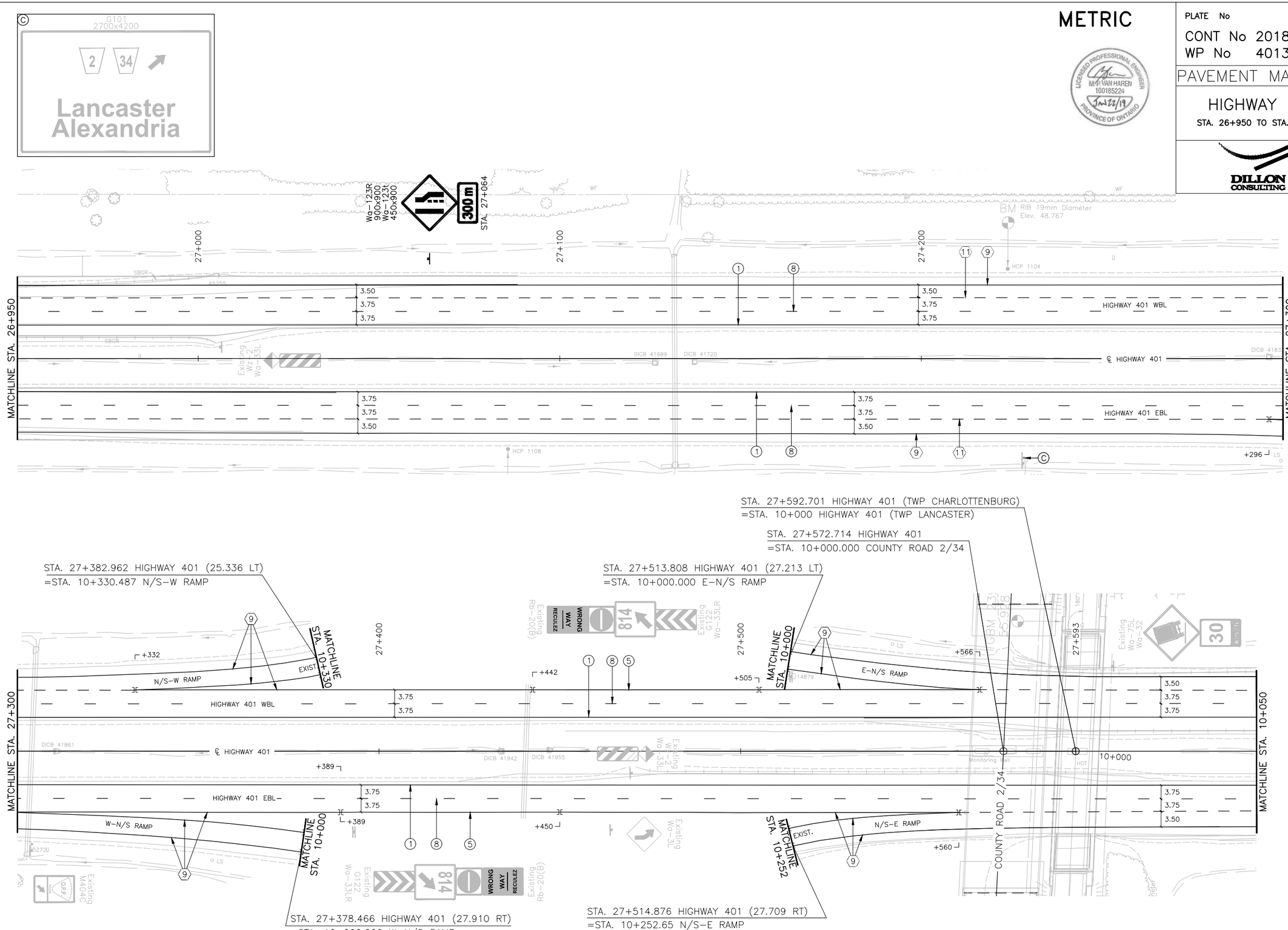

STA. 27+378.466 HIGHWAY 401 (27.910 RT)
=STA. 10+000.000 W-N/S RAMP

STA. 27+514.876 HIGHWAY 401 (27.709 RT)
=STA. 10+252.65 N/S-E RAMP

DATE PLOTTED: 1/16/2019 1:39:01 PM
FILE LOCATION: C:\projectwise\working_directory\active\10mcr\d0517908\4013-11-00 Pavement Markings.dwg

METRIC

PLATE No
CONT No 2018-4008
WP No 4013-11-00

PAVEMENT MARKINGS

SHEET 120

HIGHWAY 401
STA. 10+050 TO STA. 10+750

DILLON CONSULTING

LICENSED PROFESSIONAL ENGINEER
M.P. VAN HAREN
100185224
Jan 22/19
PROVINCE OF ONTARIO

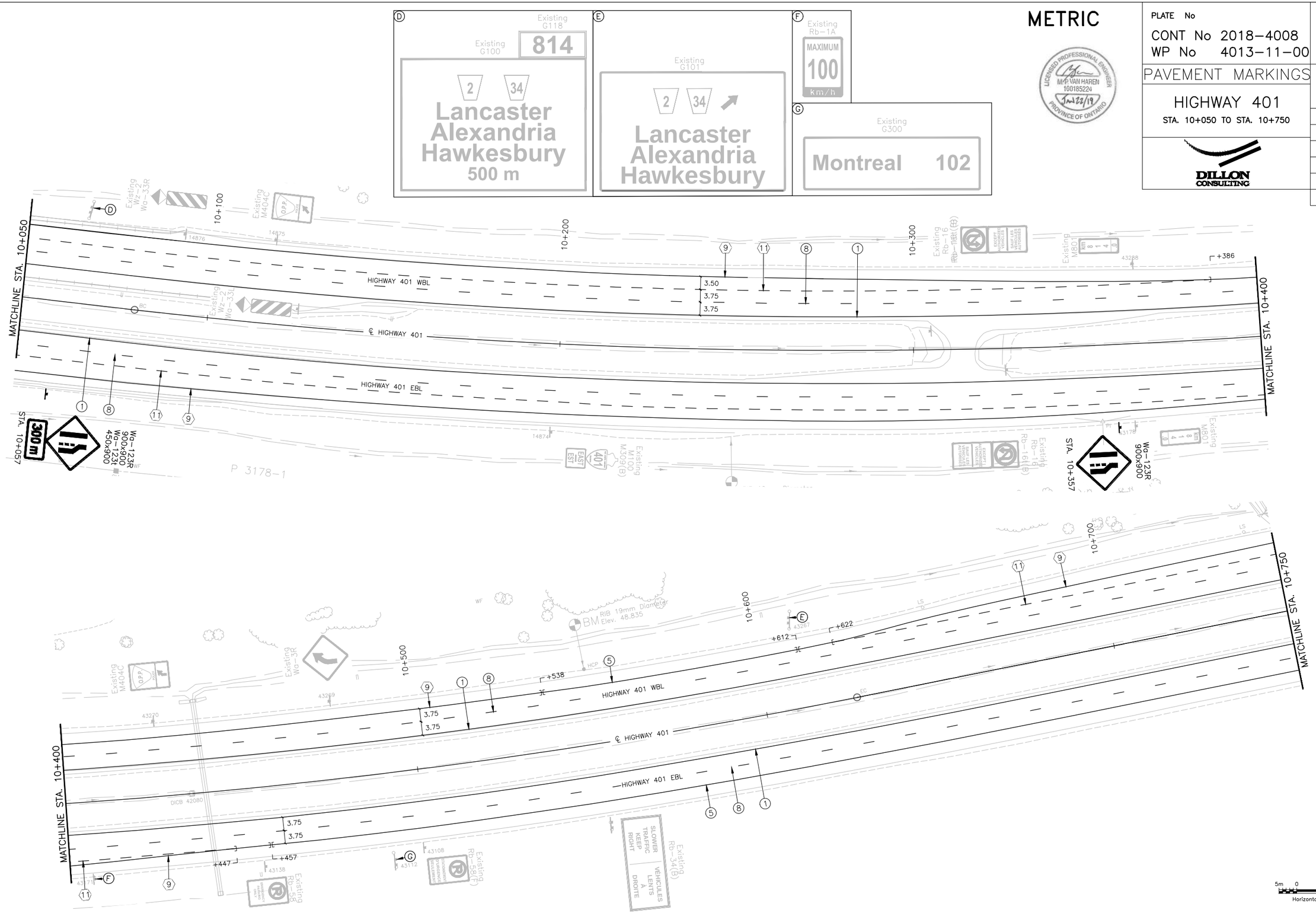

DATE PLOTTED: 1/16/2019 1:41:03 PM
FILE LOCATION: C:\projectwise\working directory\active\10mcr\d0517908\4013-11-02 Pavement Markings.dwg

METRIC

PLATE No

CONT No 2018-4008

WP No 4013-11-00

PAVEMENT MARKINGS

SHEET 121

HIGHWAY 401

STA. 10+750 TO STA. 11+450

DILLON CONSULTING

LICENSED PROFESSIONAL ENGINEER
M.P. VAN HAREN
100185224
Jan 22/19
PROVINCE OF ONTARIO

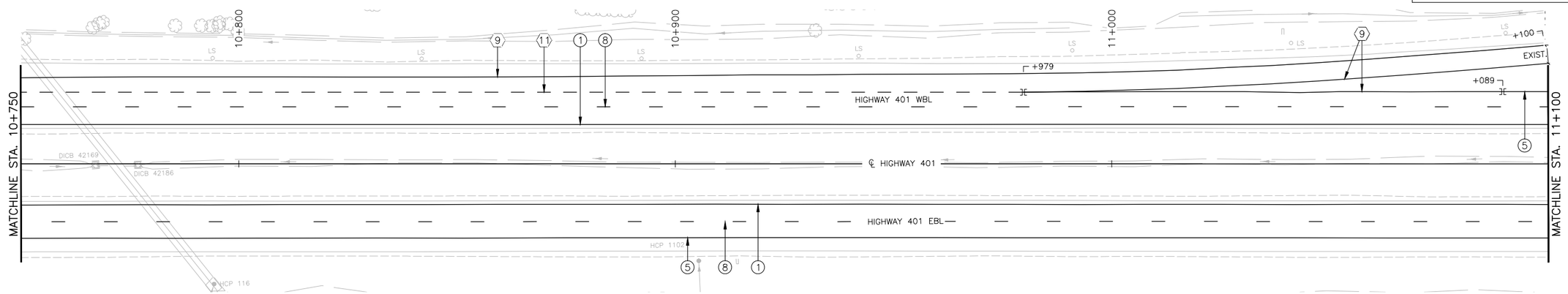

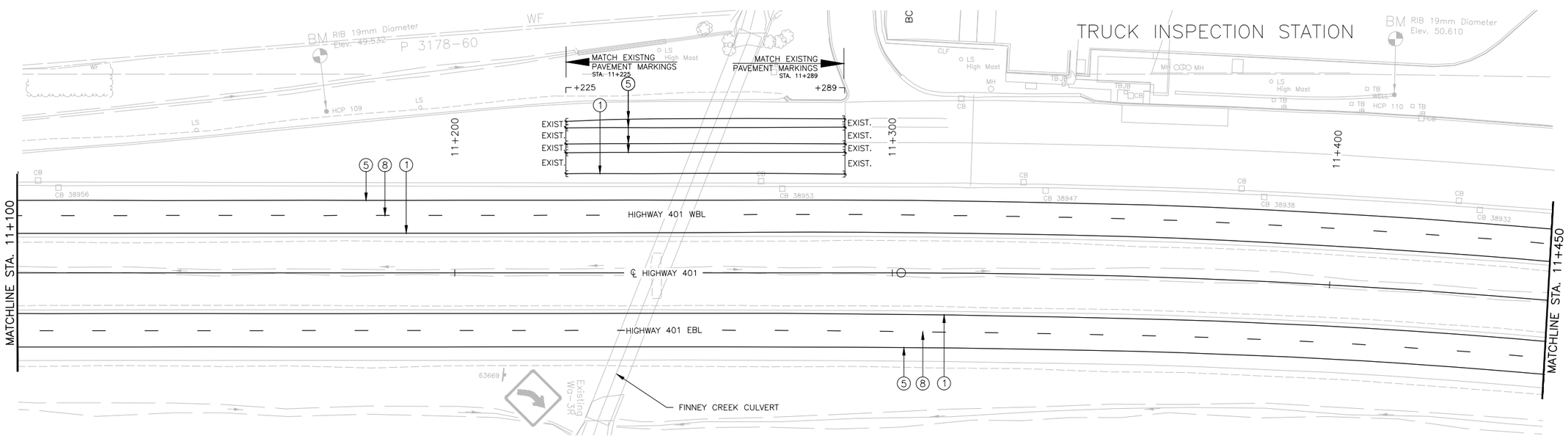

5m 0 10m
Horizontal

DATE PLOTTED: 1/16/2019 3:47:36 PM
FILE LOCATION: C:\projectwise\working_directory\active\10mcr\d0517908\4013-11-00 Pavement Markings.dwg

METRIC

PLATE No

CONT No 2018-4008

WP No 4013-11-00

PAVEMENT MARKINGS

SHEET 122

HIGHWAY 401

STA. 11+450 TO STA. 12+150

DILLON CONSULTING

LICENSED PROFESSIONAL ENGINEER
M. P. VAN HAREN
100185224
Jan 22/19
PROVINCE OF ONTARIO

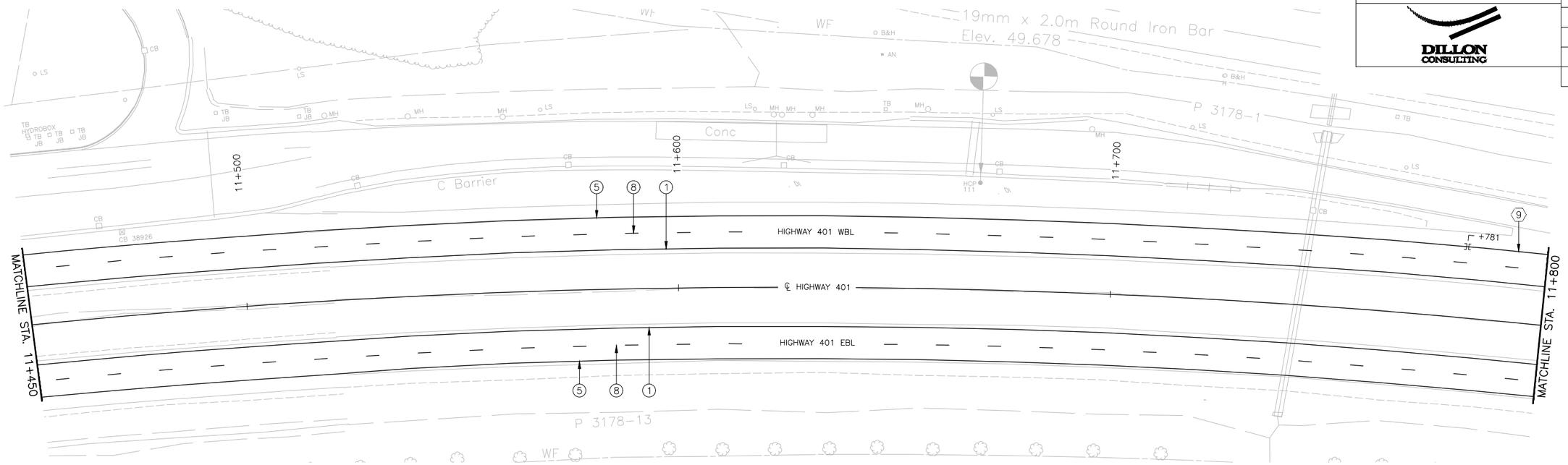

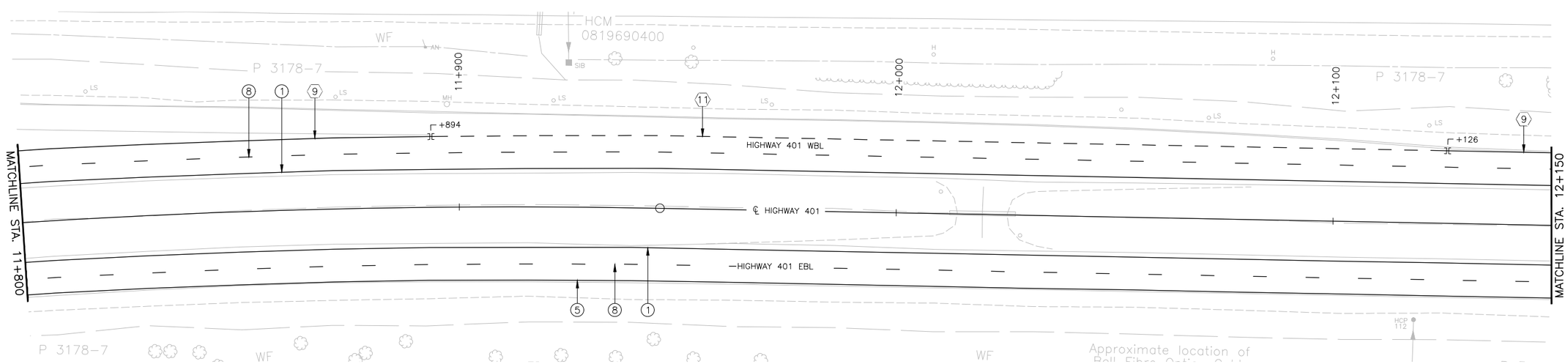

5m 0 10m
Horizontal

DATE PLOTTED: 1/16/2019 1:45:06 PM
FILE LOCATION: C:\projectwise\working directory\active\10mc\d0517908\4013-11-00 Pavement Markings.dwg

METRIC

PLATE No

CONT No 2018-4008

WP No 4013-11-00

PAVEMENT MARKINGS

SHEET 123

HIGHWAY 401

STA. 12+150 TO STA. 12+850

DILLON CONSULTING

LICENSED PROFESSIONAL ENGINEER
M.P. VAN HAREN
100185224
Jan 22/19
PROVINCE OF ONTARIO

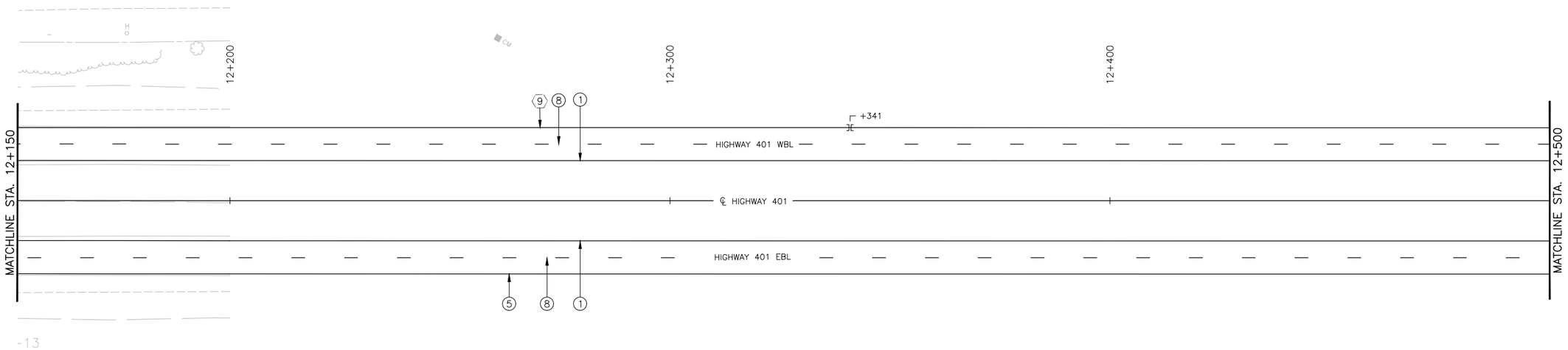

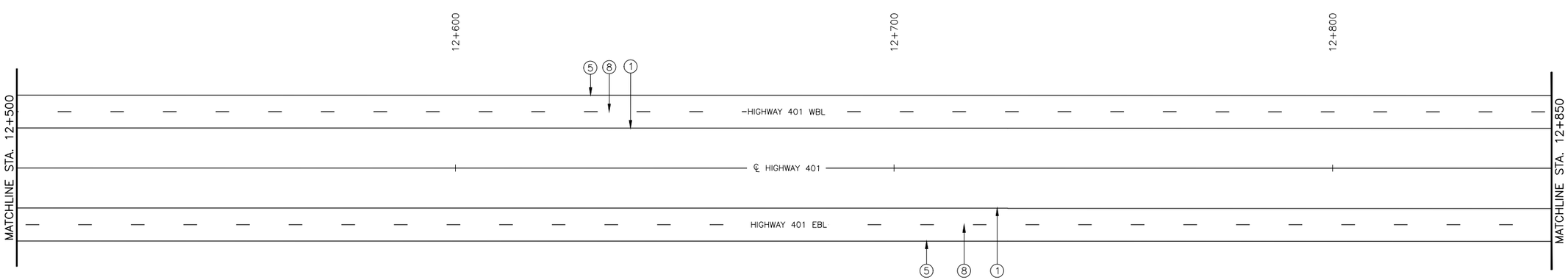

5m 0 10m
Horizontal

DATE PLOTTED: 1/16/2019 1:47:05 PM
FILE LOCATION: C:\projectwise\working directory\active\10mcr\d0517908\4013-11-00 Pavement Markings.dwg

METRIC

PLATE No

CONT No 2018-4008

WP No 4013-11-00

PAVEMENT MARKINGS

SHEET 124

HIGHWAY 401

STA. 12+850 TO STA. 13+550

DILLON CONSULTING

LICENSED PROFESSIONAL ENGINEER
M.P. VAN HAREN
100185224
JAN 22/19
PROVINCE OF ONTARIO

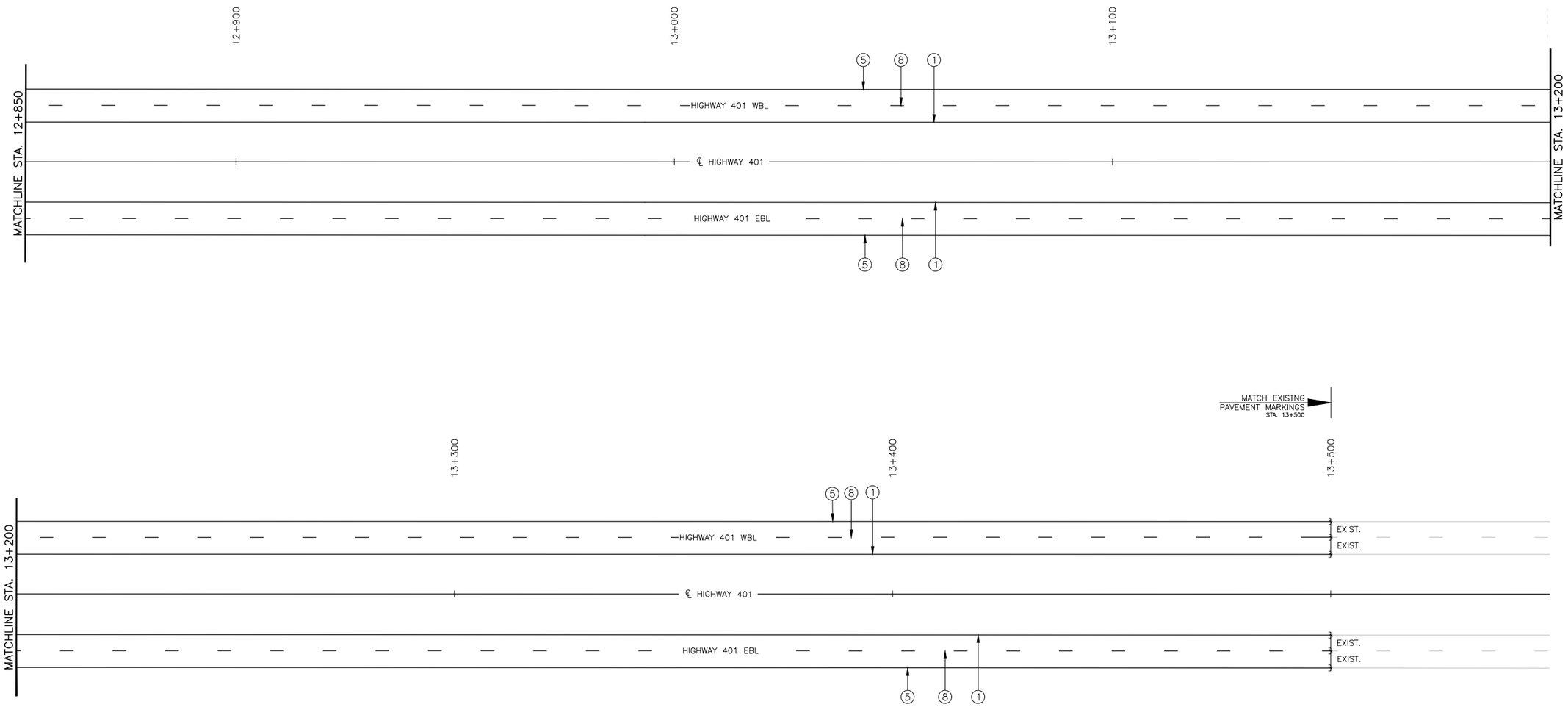

DATE PLOTTED: 1/21/2019 6:18:39 PM
FILE LOCATION: C:\projectwise\working_directory\active\10mcr\d0517908\4013-11-00 Pavement Markings.dwg

NOTE:

1. STANDARD PAVEMENT ARROW WITH LENGTHENED STEM (TOTAL LENGTH 6.5m)

METRIC

LICENSED PROFESSIONAL ENGINEER
M.P. VAN HAREN
100185224
Jan 22/19
PROVINCE OF ONTARIO

PLATE No
CONT No 2018-4008
WP No 4013-11-00

PAVEMENT MARKINGS

RAMPS

SHEET
125

DILLON CONSULTING

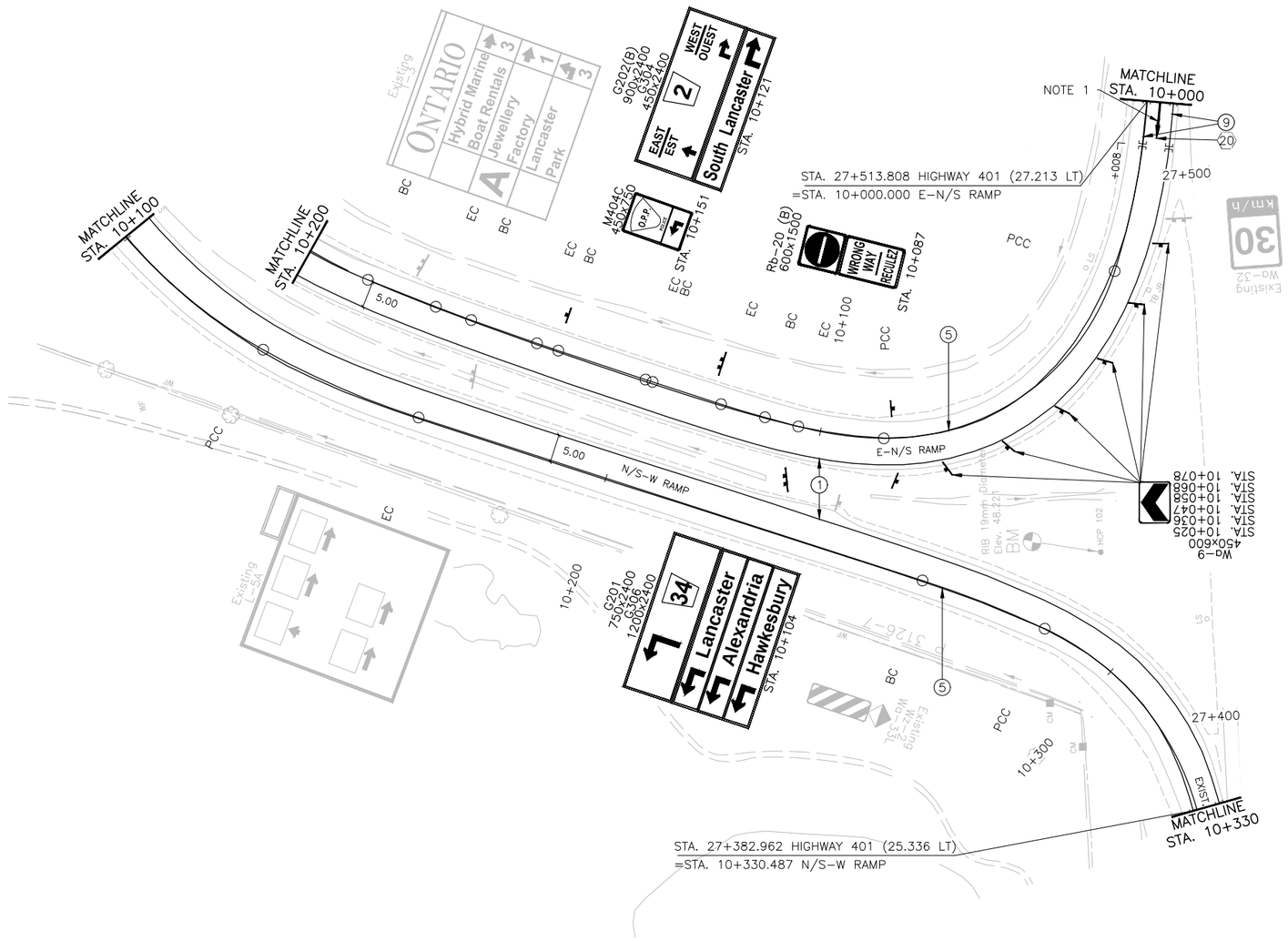

DATE PLOTTED: 1/21/2019 6:20:54 PM
FILE LOCATION: C:\projectwise\working directory\active\10mcx\d0517910\4013-Pavement Markings.dwg

NOTE:

1. STANDARD PAVEMENT ARROW WITH LENGTHENED STEM (TOTAL LENGTH 6.5m)

METRIC

LICENSED PROFESSIONAL ENGINEER
M.P. VAN HAREN
100185224
Jan 22/19
PROVINCE OF ONTARIO

PLATE No CONT No 2018–4008 WP No 4013–11–00	
PAVEMENT MARKINGS	SHEET
RAMPS	126
DILLON CONSULTING	

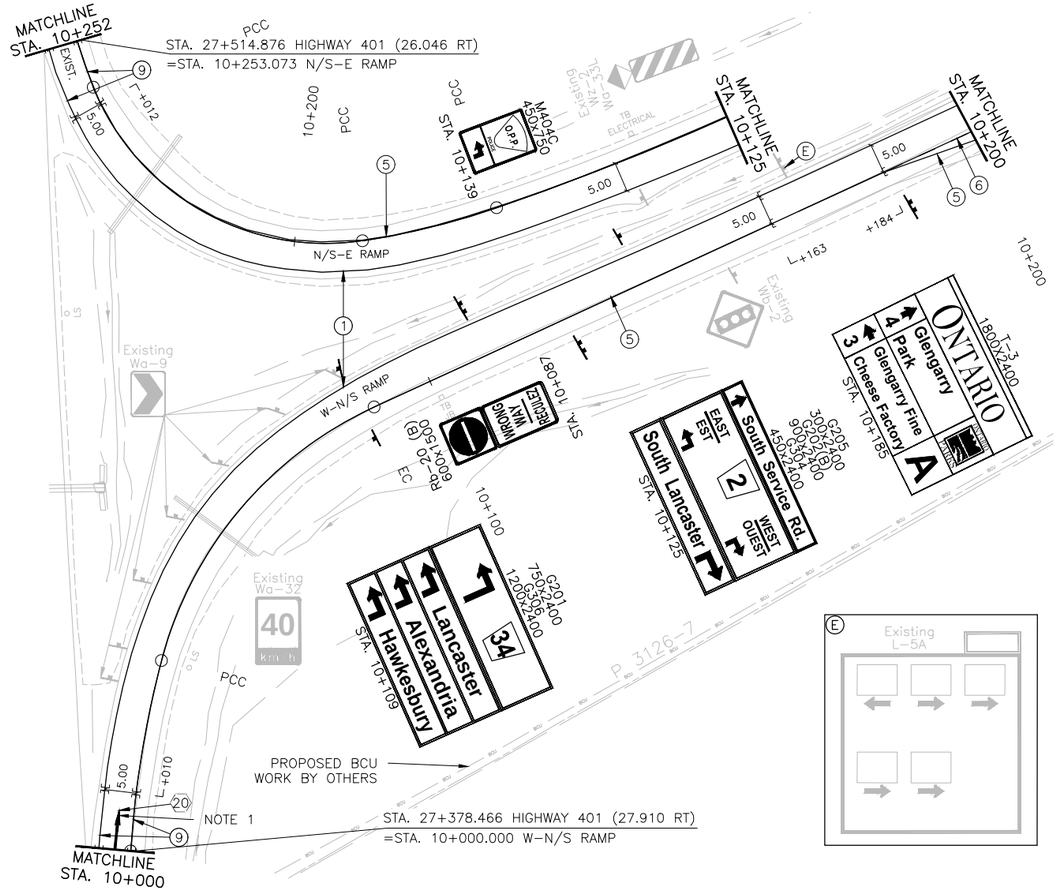

5m 0 10m
Horizontal

DATE PLOTTED: 1/21/2019 8:24:53 PM
FILE LOCATION: C:\projectwise\working directory\active\10mcr\d0517910\4013-Pavement Markings.dwg

NOTES:

1. ALL PAVEMENT MARKINGS AND SYMBOLS AT UNSIGNALIZED INTERSECTIONS ARE TO BE PLACED IN ACCORDANCE WITH OTM BOOK 11.
2. ALL PAVEMENT MARKINGS AND SYMBOLS AT SIGNALIZED INTERSECTIONS ARE TO MATCH THE PHM 125.
3. ALL PAVEMENT MARKINGS AND SYMBOLS ARE TO MATCH THE MTOD 101.070.

METRIC

LICENSED PROFESSIONAL ENGINEER
M.P. VAN HAREN
100185224
Jan 22/19
PROVINCE OF ONTARIO

PLATE No
CONT No 2018-4008
WP No 4013-11-00

PAVEMENT MARKINGS

COUNTY ROAD 2/34

STA. 9+550 TO STA. 9+850

SHEET 127

DILLON CONSULTING

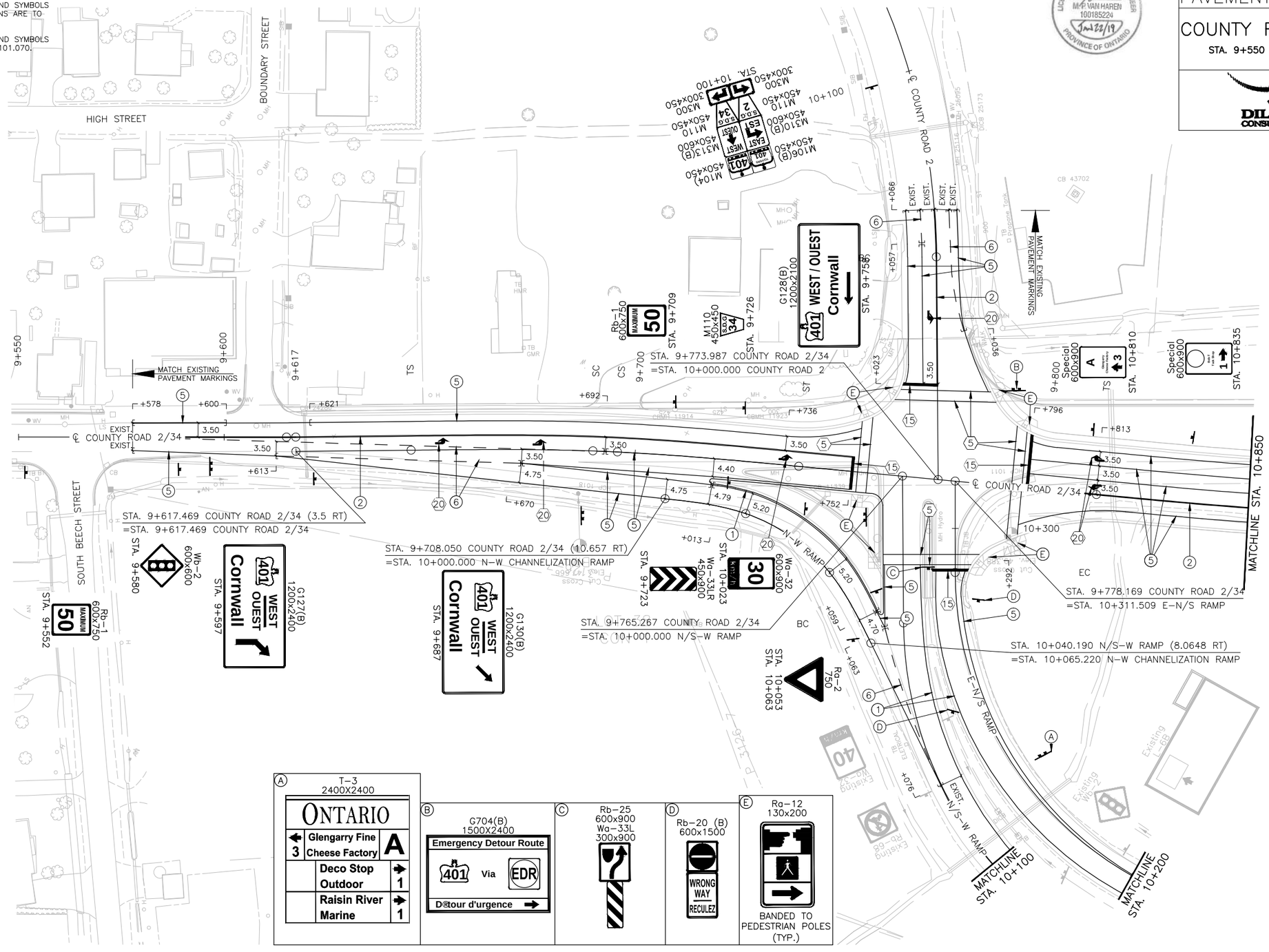

A — T-3 2400X2400
ONTARIO
3 Glengarry Fine Cheese Factory A
Deco Stop Outdoor 1
Raisin River Marine 1

B — G704(B) 1500X2400
Emergency Detour Route
401 Via EDR
Détour d'urgence

C — Rb-25 600x900 Wa-33L 300x900

D — Rb-20 (B) 600x1500
WRONG WAY
RECULEZ

E — Ra-12 130x200
BANDED TO PEDESTRIAN POLES (TYP.)

DATE PLOTTED: 1/22/2019 3:50:52 PM
FILE LOCATION: C:\projectwise\working directory\active\10mcr\d0517910\4013-Pavement Markings.dwg

METRIC

PLATE No	
CONT No 2018–4008	
WP No 4013–11–00	
PAVEMENT MARKINGS	SHEET 128
COUNTY ROAD 2/34	
STA. 9+850 TO STA. 10+150	
DILLON CONSULTING	

LICENSED PROFESSIONAL ENGINEER
M.P. VAN HAREN
100185224
Jan 22/19
PROVINCE OF ONTARIO

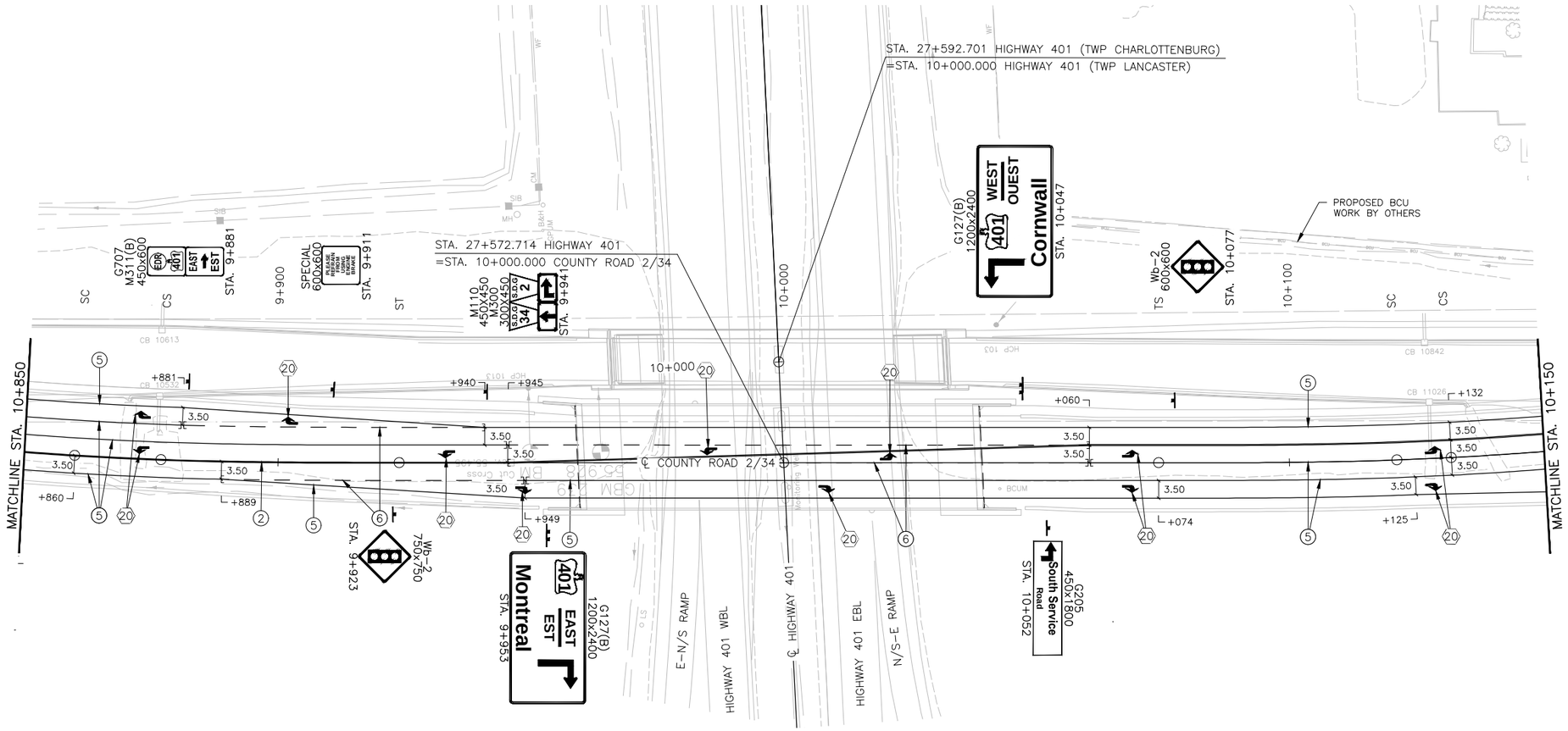

DATE PLOTTED: 1/16/2019 1:51:14 PM
FILE LOCATION: C:\projectwise\working_directory\active\10mcr\d0517910\4013-Pavement Markings.dwg

METRIC

PLATE No
CONT No 2018-4008
WP No 4013-11-00

PAVEMENT MARKINGS

COUNTY ROAD 2/34

STA.10+150 TO STA. 10+500

DILLON CONSULTING

SHEET 129

M.P. VAN HAREN 100185224 LICENSED PROFESSIONAL ENGINEER PROVINCE OF ONTARIO Jan 22/19

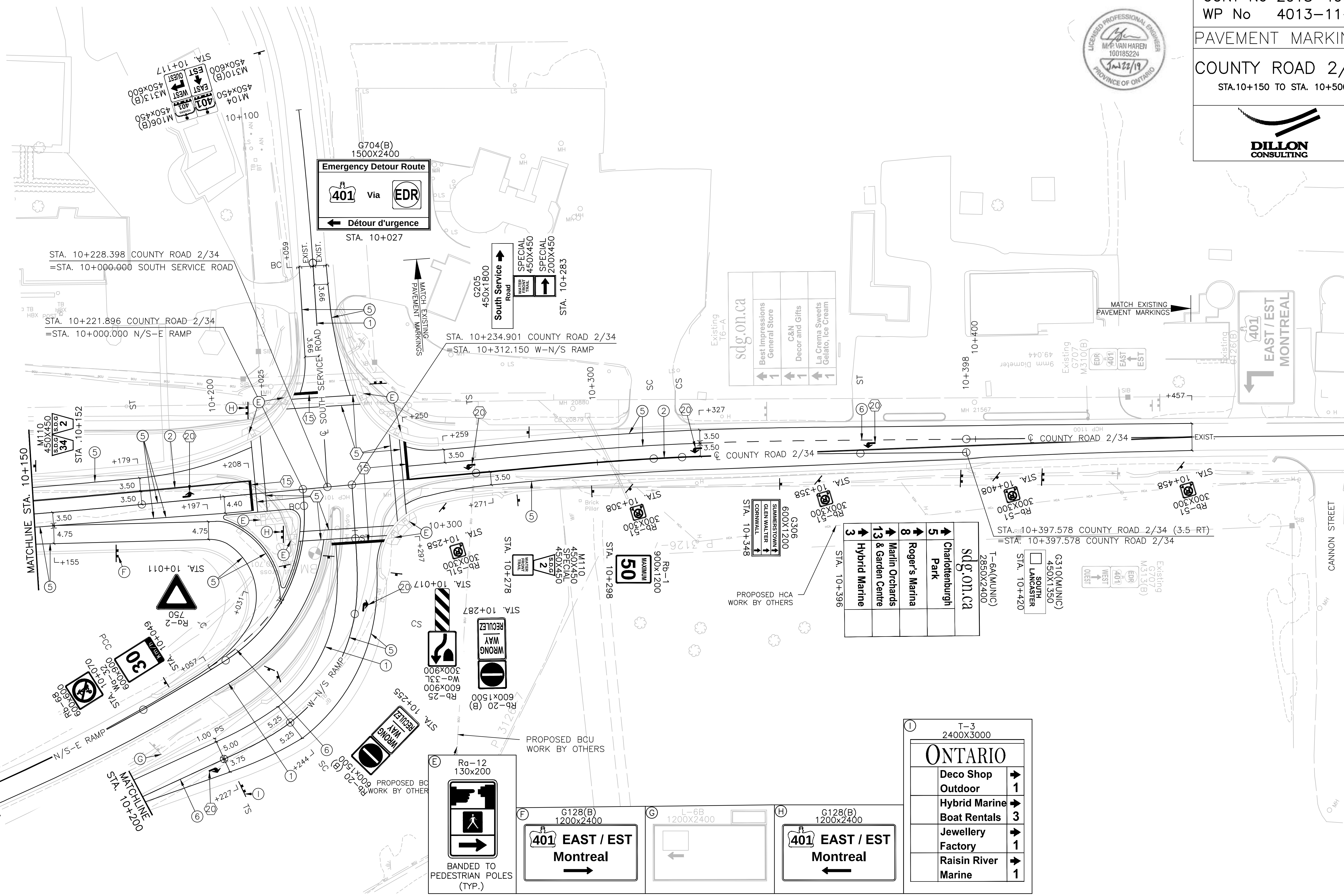

DATE PLOTTED: 1/21/2019 6:37:00 PM
FILE LOCATION: C:\projectwise\working directory\active\10mcr\d0517910\4013-Pavement Markings.dwg

METRIC

PLATE No
CONT No 2018–4008
WP No 4013–11–00

PAVEMENT MARKINGS

SHEET 130

SIGN TABLES

DILLON CONSULTING

LICENSED PROFESSIONAL ENGINEER
M.P. VAN HAREN
100185224
JAN 22/19
PROVINCE OF ONTARIO

Highway 401 (Eastbound Lanes)

Final location	Removal location	Side	Offset from EP *(m)*	Facing	Sign number	Symbol / message / description	Size B × H *(cm)*	Sign area *(m^2)*	Support type	Sign supplied by	Action	Comments
	26+605	LT		W	Wz-2	5now Plow Marker (Up)	25 × 25	0.33	N/A	N/A	Remove	To be removed at same time as SBGR
					Wa-33L	Object Marker (Left)	30 × 90					
	26+605	RT		W	Wz-2	Snow Plow Marker (Up)	25 × 25	0.33	N/A	N/A	Remove	To be removed at same time as SBGR
					Wa-33R	Object Marker (Right)	30 × 90					
26+7S8		RT	3.0	W	G331(B)	Raisin River | Rivière Raisin	150 × 60	0.90	NBK	MTO	New	Behind SBGR
26+8S7	26+857	RT	3.0	W	M404C	OPP Combo Marker [Adv R45]	60 × 10S	0.63	N/A	N/A	Relocate	Revised offset at existing station; behind SBGR
	26+880	RT		W	Wz-2	5now Plow Marker (Down)	25 × 25	0.06	N/A	N/A	Remove	
	27+470	LT		W	Wz-2	Snow Plow Marker (Up)	2S × 2S	0.33	N/A	N/A	Remove	To be removed at same time as SBGR
					Wa-33L	Object Marker (Left)	30 × 90					
10+0S7		RT		W	Wa-123R	Lane Ends	90 x 90	1.22	BK	MTO	New	
					Wa-123t	Distance Tab	4S x 90					
10+3S7		RT		W	Wa-123R	Lane Ends	90 x 90	1.22	BK	MTO	New	

Highway 401 (Westbound Lanes)

Final location	Removal location	Side	Offset from EP *(m)*	Facing	Sign number	Symbol / message / description	Size B × H *(cm)*	Sign area *(m^2)*	Support type	Sign supplied by	Action	Comments
26+695		RT	4.0	E	Rb-58	No Parking Emergency Parking Only	60 x 90	0.54	BK	MTO	New	
26+764		RT		E	Wa-123R	Lane Ends	90 x 90	0.81	BK	MTO	New	
	26+840	LT		E	G.I-6	Raisin River	120 × 20	0.24	N/A	N/A	Remove	
26+854		LT	3.0	E	G331(B)	Raisin River | Rivière Raisin	150 × 60	0.90	NBK	MTO	New	Behind 5BGR
26+947	26+947	LT	3.0	E	M100	Provincial Highway 5hield (401)	45.7 × 72.7	0.43	NBK	N/A	Relocate	Revised offset at existing station; behind 5BGR (?)
					M312(B)	Cardinal Direction Tab (West / Ouest)	45 × 45					
	27+005	LT		E	Wz-2	5now Plow Marker (Up)	25 × 25	0.33	N/A	N/A	Remove	To be removed at same time as SBGR
					Wa-33R	Object Marker (Right)	30 × 90					
	27+006	RT		E	Wz-2	5now Plow Marker (Up)	25 × 25	0.33	N/A	N/A	Remove	To be removed at same time as SBGR
					Wa-33L	Object Marker (Left)	30 × 90					
27+064		RT		E	Wa-123R	Lane Ends	90 x 90	1.22	BK	MTO	New	
					Wa-123t	Distance Tab	45 x 90					

DATE PLOTTED: 1/21/2019 6:37:33 PM
FILE LOCATION: C:\projectwise\working_directory\active\10mcr\d0517910\4013-Pavement Markings.dwg

METRIC

LICENSED PROFESSIONAL ENGINEER
M.P. VAN HAREN
100185224
Jan 22/19
PROVINCE OF ONTARIO

PLATE No
CONT No 2018–4008
WP No 4013–11–00

PAVEMENT MARKINGS

SHEET 131

SIGN TABLES

DILLON CONSULTING

County Road 2/34

Final location	Removal location	Side	Offset from EP *(m)*	Facing	Sign number	Symbol / message / description	Size B × H *(cm)*	Sign area *(m^2)*	Support type	Sign supplied by	Action	Comments
9+550	9+614	RT	3.0	N	Rb-1	Maximum 50	60 × 75	0.45	BK	N/A	Relocate	Install behind sidewalk
9+580	9+586	RT	3.0	N	Wb-2	Signals Ahead	60 × 60	0.36	BK	N/A	Relocate	
	9+597	RT	3.5	N	G126(B)	401 WEST/OUE5T | CORNWALL [Adv R45]	240 × 120	2.88	N/A	N/A	Remove	
9+597		RT	3.5	N	G127(B)	401 WE5T | OUE5T | Cornwall [Adv R45]	240 × 120	2.88	BK	MTO	New	
9+622	9+650	RT	4.0	N	SPECIAL	Municipal TODS (Bob-T Tack Shop)	90 × 60	0.54	BK	N/A	Relocate	
9+687		RT	3.0	N	G130(B)	401 WEST | OUE5T | Cornwall [R45]	240 × 120	2.88	BK	MTO	New	
	9+700	RT	3.0	N	G131(B)	401 WE5T/OUE5T | CORNWALL [R45]	240 × 120	2.88	N/A	N/A	Remove	
9+709	9+708	LT	2.5	S	Rb-1	Maximum 50	75 × 60	0.45	BK	N/A	Relocate	
9+723	9+730	RT	0.3	N	Wa-32	Object Marker (Left and Right)	45 × 90	0.41	BK	N/A	Relocate	
9+726	9+725	LT	2.5	5	M110	County Road Marker (5.D.G. 34)	45 × 45	0.15	BK	N/A	Relocate	
9+755		LT	see comment	S	Ra-12	Pedestrian Pushbutton Symbol [Left]	13 × 20	0.03	Other	MTO	New	Banded to pedestrian pole
9+756		RT	see comment	S	Ra-12	Pedestrian Pushbutton Symbol [Right]	13 × 20	0.03	Other	MTO	New	Banded to pedestrian pole
9+758	9+757	RT	4.0	S	G128(B)	401 WEST/OUE5T | Cornwall [L90]	210 × 120	2.52	BK	N/A	Relocate	
	9+757	RT	3.0	E	G.d-2	South Service Road [Left]	90 × 20	0.36	N/A	N/A	Remove	
					G.d-2	South Lancaster [Left]	90 × 20					
9+793		LT	see comment	N	Ra-12	Pedestrian Pushbutton Symbol [Right]	13 × 20	0.03	Other	MTO	New	Banded to pedestrian pole
9+793		RT	see comment	N	Ra-12	Pedestrian Pushbutton Symbol [Left]	13 × 20	0.03	Other	MTO	New	Banded to pedestrian pole
	9+809	RT	3.2	N	Wz-2	Snow Plow Marker (Up)	25 × 25	0.33	N/A	N/A	Remove	To be removed at same time as SBGR
					Wa-33R	Object Marker (Right)	30 × 90					
9+810	9+808	LT	2.5	S	SPECIAL	Municipal TODS (Glengarry Cheese Factory)	90 × 60	0.54	BK	N/A	Relocate	To be relocated by CTODS
9+835	9+834	LT	2.5	S	SPECIAL	Municipal TODS (Bob-T Tack Shop)	90 × 60	0.54	BK	N/A	Relocate	To be relocated by CTODS
9+881	9+864	LT	3.0	S	G707	EDR 401	45 × 60	0.54	BK	N/A	Relocate	Direction / arrow tab: Black text and symbol on yellow background
					M311(B)	EAST | EST [R90]	45 × 60					
9+911	9+912	LT	3.0	S	SPECIAL	Please Refrain from using Engine Brake	60 × 60	0.36	BK	N/A	Relocate	
9+923	9+900	RT	2.0	N	Wb-2	Signals Ahead	75 × 75	0.56	BK	N/A	Relocate	
	9+934	RT		N	G126(B)	401 EAST/E5T | MONTREAL [Adv R90]	240 × 120	2.88	N/A	N/A	Remove	
9+941		LT	3.5	5	M110	County Road Marker (S.D.G. 34)	45 × 45	0.57	NBK	MTO	New	Behind SBGR
					M300	Directional Arrow Tab (Adv.)	45 × 30			MTO		
					M110	County Road Marker (5.D.G. 2)	45 × 45			MTO		
					M300	Directional Arrow Tab (Adv R90)	45 × 30			MTO		
9+953		RT	2.0	N	G127(B)	401 EAST | EST | Montreal [Adv R90]	240 × 120	2.88	NBK	MTO	New	Behind SBGR

DATE PLOTTED: 1/16/2019 1:51:52 PM
FILE LOCATION: C:\projectwise\working directory\active\10mcr\d0517910\4013-Pavement Markings.dwg

METRIC

PLATE No
CONT No 2018–4008
WP No 4013–11–00

PAVEMENT MARKINGS

SHEET 132

SIGN TABLES

DILLON CONSULTING

LICENSED PROFESSIONAL ENGINEER
M.P. VAN HAREN
100185224
Jan 22/19
PROVINCE OF ONTARIO

County Road 2/34

Final location	Removal location	Side	Offset from EP *(m)*	Facing	Sign number	Symbol / message / description	Size B × H *(cm)*	Sign area *(m^2)*	Support type	Sign supplied by	Action	Comments
10+047		LT	3.8	S	G127(B)	401 WEST | OUEST | Cornwall [Adv L90]	240 × 120	2.88	NBK	MTO	New	Behind SBGR
10+052		RT	2.0	N	G205	South Service | Road [Adv L90]	180 × 45	0.81	NBK	MTO	New	Behind SBGR
	10+066	LT		S	G126(B)	401 WEST/OUEST | CORNWALL [Adv L90]	240 × 120	2.88	N/A	N/A	Removal	
10+077	9+935	LT	3.0	S	Wb-2	Signals Ahead	60 × 60	0.36	BK	N/A	Relocate	
10+152	10+152	LT	2.5	S	M110	County Road Marker (S.D.G. 34)	45 × 45	0.30	N/A	N/A	Relocate	Revised offset at existing station
					M110	County Road Marker (S.D.G. 2)	45 × 45					S.D.G. 34 marker on left side of assembly
10+172	10+206	RT	1.5	N	G128(B)	401 EAST/EST | Montreal [R90]	240 × 120	2.88	BK	N/A	Relocate	Relocation of existing north-facing panel at 10+206
	10+197	RT		N	G216	South Service Rd. [L90]	150 × 20	0.30	N/A	N/A	Remove	
	10+206	RT		N	G128(B)	401 EAST/EST | Montreal [R90]	240 × 120	2.88	N/A	N/A	Remove	Salvage north-facing panel and relocate to 10+172
				S	G128(B)	401 EAST/EST | Montreal [L90]	240 × 120	2.88			Remove	
10+209	10+206	LT	6.2	S	G128(B)	401 EAST/EST | Montreal [L90]	240 × 120	2.88	BK	N/A	Relocate	
10+211		RT	see comment	S	Ra-12	Pedestrian Pushbutton Symbol [Right]	13 × 20	0.03	Other	MTO	New	Banded to pedestrian pole
10+211		LT	see comment	S	Ra-12	Pedestrian Pushbutton Symbol [Left]	13 × 20	0.03	Other	MTO	New	Banded to pedestrian pole
10+216	10+206	RT	4.0	S	G128(B)	401 EAST/EST | Montreal [L90]	240 × 120	2.88	BK	N/A	Relocate	
10+248		LT	see comment	N	Ra-12	Pedestrian Pushbutton Symbol [Right]	13 × 20	0.03	Other	MTO	New	Banded to pedestrian pole
10+248		RT	see comment	N	Ra-12	Pedestrian Pushbutton Symbol [Left]	13 × 20	0.03	Other	MTO	New	Banded to pedestrian pole
10+258		RT	1.5	N	Rb-51L	No Parking (Left)	30 × 30	0.09	BK	MTO	New	Angled at 30 to 45 degrees to oncoming traffic
10+278	10+281	RT	2.8	N	M110	County Road Marker (S.D.G. 2)	45 × 45	0.35	BK	N/A	Relocate	
	10+407				SPECIAL	Waterfront Trail Marker	45 × 45				Relocate	
	10+281	RT		N	M110	County Road Marker (S.D.G. 2)	45 × 45	0.24	N/A	N/A	Remove	Salvage M110 marker and relocate to 10+278
					SPECIAL	Waterfront Trail Marker	30 × 30				Remove	
10+283	—	LT	2.0	S	G205	South Service | Road [R90]	180 × 45	1.10	BK	MTO	New	
	10+284				SPECIAL	Waterfront Trail Marker	45 × 45			N/A	Relocate	
	10+284				SPECIAL	Directional Arrow Tab (Right)	45 × 20			N/A	Relocate	
	10+284	LT		S	G216	South Service Road [R90]	150 × 20	0.59	N/A	N/A	Remove	
					SPECIAL	Waterfront Trail Marker	45 × 45			N/A	Remove	Salvage and relocate to 10+283
					SPECIAL	Directional Arrow Tab (Right)	45 × 20			N/A	Remove	Salvage and relocate to 10+283
	10+288	RT		N	Rb-51 (mod.)	No Parking	30 × 45	0.14	N/A	N/A	Remove	
10+298	10+375	RT	2.8	N	Rb-1	Maximum 50	90 × 120	1.08	BK	N/A	Relocate	
10+308		RT	2.8	N	Rb-51	No Parking	30 × 30	0.09	BK	MTO	New	Angled at 30 to 45 degrees to oncoming traffic
	10+310	RT		N	Rb-51 (mod.)	No Parking	30 × 45	0.14	N/A	N/A	Remove	
10+348	10+321	RT	2.8	N	G306 (mod.)	Summerstown [Adv] | Glen Walter [Adv] | Cornwall [Adv]	120 × 60	0.72	BK	N/A	Relocate	
10+358		RT	2.8	N	Rb-51	No Parking	30 × 30	0.09	BK	MTO	New	Angled at 30 to 45 degrees to oncoming traffic
	10+361	RT		N	Rb-51 (mod.)	No Parking	30 × 45	0.14	N/A	N/A	Remove	
	10+391	RT		N	Rb-51 (mod.)	No Parking	30 × 45	0.14	N/A	N/A	Remove	
10+396	10+396	LT	x	S	T-6A (munic.)	Municipal TODS Assembly	240 × 225	5.40	N/A	N/A	Exist.	
10+396	10+396	RT	2.8	N	T-6A (munic.)	Municipal TODS Assembly	240 × 285	6.84	BK	N/A	Relocate	Existing sign to be removed by CTODS and salvaged for reinstatement at same station by CTODS upon completion of construction
10+420	10+341	RT	5.1	N	G310 (munic.)	Municipal South Lancaster	45 x 135	0.61	BK	N/A	Relocate	Salvage and relocate to 10+420
10+440	10+440	RT	x	N	G707	EDR 401	45 × 60	0.54	N/A	N/A	Exist.	
					M313(B)	WEST | OUEST [Adv.]	45 × 60					Black text and symbol on yellow background
10+449	10+449	LT	x	S	G707	EDR 401	45 × 60	0.54	N/A	N/A	Exist.	
					M310(B)	EAST | EST [Adv.]	45 × 60					Black text and symbol on yellow background
10+451	10+451	LT	x	S	G126(B)	401 EAST/EST | Montreal [Adv L90]	240 × 120	2.88	N/A	N/A	Exist.	
10+458		RT	2.8	N	Rb-51	No Parking	30 × 30	0.09	BK	MTO	New	Angled at 30 to 45 degrees to oncoming traffic

N-W Ramp

Final location	Removal location	Side	Offset from EP *(m)*	Facing	Sign number	Symbol / message / description	Size B × H *(cm)*	Sign area *(m^2)*	Support type	Sign supplied by	Action	Comments
10+023		LT	1.2	N	Rb-68	Ramp Speed 30 km/h	60 × 90	0.54	BK	MTO	New	
	10+016	LT		N	Rb-68	Ramp Speed 40 km/h	60 × 90	0.54	N/A	N/A	Remove	
10+053	10+041	LT	1.2	N	Ra-2	Yield	75 × 75	0.24	BK	N/A	Relocate	Angled at 20 degrees to EP
10+063		RT	3.6	N	Ra-2	Yield	75 × 75	0.24	BK	MTO	New	

DATE PLOTTED: 1/22/2019 6:19:45 PM
FILE LOCATION: C:\projectwise\working directory\active\10mcr\d0517910\4013-Pavement Markings.dwg

METRIC

PLATE No
CONT No 2018–4008
WP No 4013–11–00

PAVEMENT MARKINGS

SHEET 133

SIGN TABLES

DILLON CONSULTING

LICENSED PROFESSIONAL ENGINEER
M.P. VAN HAREN
100185224
Jan 22/19
PROVINCE OF ONTARIO

E-N/S Ramp

Final location	Removal location	Side	Offset from EP *(m)*	Facing	Sign number	Symbol / message / description	Size B × H *(cm)*	Sign area *(m^2)*	Support type	Sign supplied by	Action	Comments
10+025		LT	1.8	E	Wa-9	Chevron (Right)	45 × 60	0.27	NBK	MTO	New	Rotate at 15 degrees to left EP; behind 5BGR
10+036		LT	1.8	E	Wa-9	Chevron (Right)	45 × 60	0.27	NBK	MTO	New	Rotate at 15 degrees to left EP; behind 5BGR
10+047		LT	1.8	E	Wa-9	Chevron (Right)	45 × 60	0.27	NBK	MTO	New	Rotate at 15 degrees to left EP; behind 5BGR
10+058		LT	1.8	E	Wa-9	Chevron (Right)	45 × 60	0.27	NBK	MTO	New	Rotate at 20 degrees to left EP; behind 5BGR
10+068		LT	1.8	E	Wa-9	Chevron (Right)	45 × 60	0.27	NBK	MTO	New	Rotate at 25 degrees to left EP; behind 5BGR
10+078		LT	1.8	E	Wa-9	Chevron (Right)	45 × 60	0.27	NBK	MTO	New	Rotate at 25 degrees to left EP; behind 5BGR
10+087		RT	5.5	E	Rb-20	Do Not Enter/Wrong Way	60 x 150	0.90	BK	MTO	New	Rotate at 20 to 30 degrees to oncoming (wrong way) traffic
10+087		LT	3.0	E	Rb-20	Do Not Enter/Wrong Way	60 x 150	0.90	BK	MTO	New	Rotate at 20 to 30 degrees to oncoming (wrong way) traffic
10+104		LT	1.8	S	G201 (mod.)	[34] [Adv. L90]	240 × 75	4.68	BK	MTO	New	450x450 trapezoidal route marker in place of MC-Crown marker
					G306	Lancaster [Adv L90] | Alexandria [Adv L90] | Hawkesbury [Adv L90]	240 × 120					Assembly mounted on intermediate sign support system
10+121		RT	3.5	S	G201 (mod.)	[2] East / Est [Adv.] | West / Ouest [Adv. R90]	240 × 90	3.24	BK	MTO	New	450x450 trapezoidal route marker in place of MC-Crown marker
					G306	South Lancaster [Adv R90]	240 × 45					
10+151		RT	3.5	S	M404C	OPP Combo Marker [Adv L90]	45 × 75	0.34	BK	MTO	New	
10+237	10+237	RT	5.0	W	T-3	TOD5 Freeway Ramp Assembly	240 × 240	5.76	BK	N/A	Relocate	Revised offset at existing station; to be relocated by CTOD5
	10+305	LT	1.5	E	Rb-19	Do Not Enter	60 × 60	0.36	BK	N/A	Remove	
10+256		LT	1.5	E	Rb-20	Do Not Enter/Wrong Way	60 x 150	0.90	BK	MTO	New	Rotate at 20 to 30 degrees to oncoming (wrong way) traffic
	10+303	RT	1.5	E	Rb-19	Do Not Enter	60 × 60	0.36	Other	N/A	Remove	
10+283		RT	5.3	E	Rb-20	Do Not Enter/Wrong Way	60 x 150	0.90	BK	MTO	New	Rotate at 20 to 30 degrees to oncoming (wrong way) traffic
10+295		RT	see comment	E	Ra-12	Pedestrian Pushbutton Symbol [Right]	13 × 20	0.03	Other	MTO	New	Banded to pedestrian pole

N/S-W Ramp

Final location	Removal location	Side	Offset from EP *(m)*	Facing	Sign number	Symbol / message / description	Size B × H *(cm)*	Sign area *(m^2)*	Support type	Sign supplied by	Action	Comments
10+020		Rt	see comment	E	Ra-12	Pedestrian Pushbutton Symbol [Left]	13 × 20	0.03	Other	MTO	New	Banded to pedestrian pole
10+022	10+007	LT	see comment	E	Rb-25	Keep Right	60 × 90	0.81	Other	N/A	Relocate	Banded to traffic signal pole
10+242		LT	x	E	Wa-33L	Object Marker (Left)	30 × 90	0.33	N/A	N/A	Exist.	

N/S-E Ramp

Final location	Removal location	Side	Offset from EP *(m)*	Facing	Sign number	Symbol / message / description	Size B × H *(cm)*	Sign area *(m^2)*	Support type	Sign supplied by	Action	Comments
10+011		RT	2.1	N	Ra-2	Yield	75 x 75	0.24	BK	MTO	New	Angled at 20 degrees to EP
10+012		RT	see comment	E	Ra-12	Pedestrian Pushbutton Symbol [Left]	13 × 20	0.03	Other	MTO	New	Banded to pedestrian pole
10+017	10+007	LT	[see comment]	E	Rb-25	Keep Right	60 × 90	0.81	Other	N/A	Relocate	Relocated signs banded to traffic signal pole
					Wa-33L	Object Marker (Left)	30 × 90					
10+049	10+029	LT	1.8	E	Wa-32	Ramp Speed 30 km/h	60 × 90	0.54	BK	N/A	Relocate	Rotate at 20 to 30 degrees to left curb
10+144		RT	x	E	Wa-33R	Object Marker (Right)	30 × 90	0.33	N/A	N/A	Exist.	

W-N/S Ramp

Final location	Removal location	Side	Offset from EP *(m)*	Facing	Sign number	Symbol / message / description	Size B × H *(cm)*	Sign area *(m^2)*	Support type	Sign supplied by	Action	Comments
10+087		RT	4.8	E	Rb-20	Do Not Enter/Wrong Way	60 x 150	0.90	BK	MTO	New	Rotate at 20 to 30 degrees to oncoming (wrong way) traffic
10+087		LT	3.0	E	Rb-20	Do Not Enter/Wrong Way	60 x 150	0.90	BK	MTO	New	Rotate at 20 to 30 degrees to oncoming (wrong way) traffic
10+109		LT	2.0	W	G201 (mod.)	[34] [Adv. L90]	240 × 75	4.68	BK	MTO	New	450x450 trapezoidal route marker in place of MC-Crown marker
					G306	Lancaster [Adv L90] | Alexandria [Adv L90] | Hawkesbury [Adv L90]	240 × 120					Assembly mounted on intermediate sign support system
10+125		RT	3.5	W	G205 (mod.)	South Service Rd. [Adv.]	240 × 30	3.96	BK	MTO	New	Text on single line
					G202(B) (mod.)	[2] East / Est [Adv. L90] | West / Ouest [Adv. R90]	240 × 90					450x450 trapezoidal route marker in place of MC-Crown marker
					G304	South Lancaster [Adv R90]	240 × 45					Assembly mounted on intermediate sign support system
10+139		LT	2.0	W	M404C	OPP Combo Marker [Adv L90]	45 × 75	0.34	BK	MTO	New	
10+185	10+185	RT	3.5	W	T-3	TOD5 Freeway Ramp Assembly	240 × 180	4.32	BK	N/A	Relocate	Revised offset at existing station; to be relocated by CTOD5
10+223	10+223	RT	3.5	W	T-3	TOD5 Freeway Ramp Assembly	240 × 300	7.20	BK	N/A	Relocate	Revised offset at existing station; to be relocated by CTOD5
	10+296	LT	1.8	E	Rb-19	Do Not Enter	60 × 60	0.36	BK	N/A	Remove	
10+255		LT	1.8	E	Rb-20	Do Not Enter/Wrong Way	60 x 150	0.90	BK	MTO	New	Rotate at 20 to 30 degrees to oncoming (wrong way) traffic
	10+302	RT	1.6	E	Rb-19	Do Not Enter	60 × 60	0.36	BK	N/A	Remove	
10+287		RT	6.0	E	Rb-20	Do Not Enter/Wrong Way	60 x 150	0.90	BK	MTO	New	Rotate at 20 to 30 degrees to oncoming (wrong way) traffic
10+299		RT	see comment	E	Ra-12	Pedestrian Pushbutton Symbol [Left]	13 × 20	0.03	Other	MTO	New	Banded to pedestrian pole

DATE PLOTTED: 1/16/2019 1:52:02 PM
FILE LOCATION: C:\projectwise\working_directory\active\10mcr\d0517910\4013-Pavement Markings.dwg

METRIC

LICENSED PROFESSIONAL ENGINEER
M.P. VAN HAREN
100185224
Jan 22/19
PROVINCE OF ONTARIO

PLATE No
CONT No 2018–4008
WP No 4013–11–00

PAVEMENT MARKINGS

SHEET 134

SIGN TABLES

DILLON CONSULTING

South Service Road

Final location	Removal location	Side	Offset from EP *(m)*	Facing	Sign number	Symbol / message / description	Size B × H *(cm)*	Sign area *(m^2)*	Support type	Sign supplied by	Action	Comments
	10+019	RT		W	G704(B)	Emergency Detour Route - 401 VIA EDR - EAST/EST (Left)	240 × 150	3.60	N/A	N/A	Remove	
	10+021	RT		W	xxxxx	South Service Rd [Adv]	120 × 20	1.86	N/A	N/A	Remove	
					G307	Destination Fingerboard - Alexandria 22 [L]	90 × 30					
					G307	Destination Fingerboard - Hawkesbury 61 [L]	90 × 30					
					G304	Lancaster [L90]	90 × 30					
					G304	South Lancaster [R90]	90 × 30					
					M404	Ontario Provincial Police	60 × 60					
					M301	Directional Arrow Tab [L90]	60 × 30					
10+023		LT	see comment	W	Ra-12	Pedestrian Pushbutton Symbol [Right]	13 × 20	0.03	Other	MTO	New	Banded to pedestrian pole
10+023		RT	see comment	W	Ra-12	Pedestrian Pushbutton Symbol [Left]	13 × 20	0.03	Other	MTO	New	Banded to pedestrian pole
10+027		RT	2.5	W	G704(B)	Emergency Detour Route - 401 VIA EDR (Left)	240 × 150	3.60	BK	MTO	New	
10+117		LT	2.5	E	M104	Provincial Highway Crown (401)	45 × 45	0.95	BK	MTO	New	
					M310(B)	Cardinal Direction Tab with Arrow (EAST/EST Adv)	45 × 60			MTO		
					M106(B)	Provincial Highway Crown (TO/VERS 401)	45 × 45			MTO		
					M313(B)	Cardinal Direction Tab with Arrow (WEST/OUEST Adv R90)	45 × 60			MTO		Green background; white text and arrow

County Road 2

Final location	Removal location	Side	Offset from EP *(m)*	Facing	Sign number	Symbol / message / description	Size B × H *(cm)*	Sign area *(m^2)*	Support type	Sign supplied by	Action	Comments
10+020		LT	see comment	W	Ra-12	Pedestrian Pushbutton Symbol [Right]	13 × 20	0.03	Other	MTO	New	Banded to pedestrian pole
10+021		LT	see comment	W	Ra-12	Pedestrian Pushbutton Symbol [Left]	13 × 20	0.03	Other	MTO	New	Banded to pedestrian pole
10+022		RT	4.5	W	G704(B)	Emergency Detour Route - 401 VIA EDR (Right)	240 × 150	3.60	BK	MTO	New	Green background; white text and arrow
10+100		LT	3.0	E	M106(B)	Provincial Highway Crown (TO/VERS 401)	45 × 45	1.52	BK	MTO	New	
					M310(B)	Cardinal Direction Tab with Arrow (EAST/EST Adv L90)	45 × 60			MTO		
					M104	Provincial Highway Crown (401)	45 × 45			MTO		
					M313(B)	Cardinal Direction Tab with Arrow (WEST/OUEST Adv)	45 × 60			MTO		
					M110	County Road Marker (S.D.G. 2)	45 × 45			MTO		
					M300	Directional Arrow Tab (Adv L90)	45 × 30			MTO		
					M110	County Road Marker (S.D.G. 34)	45 × 45			MTO		
					M300	Directional Arrow Tab (Adv R90)	45 × 30			MTO		

DATE PLOTTED: 1/16/2019 1:52:07 PM
FILE LOCATION: C:\projectwise\working directory\active\10mcr\d0517910\4013-Pavement Markings.dwg

METRIC

PLATE No.	
CONT.	2018-4008
G.W.P. No.	4013-11-00
SOIL DATA	SHEET 135
Golder Associates	PREPARED: JANUARY 2018
	REVISED:

HIGHWAY 401 - RAISIN RIVER BRIDGE REPLACEMENTS

GEOTECHNICAL SURVEY DATA

DATE OF SURVEY	TYPE OF SURVEY
Soils Boreholes: November 2017 Pavement Core Holes: November 2017	Golder Associates Ltd. Soil Boreholes: (Power Auger – PA, Hand Auger - HA) Core Holes: Rotary Drill

NOTES

1. Conditions and pavement depths apply only to the date of the survey.
2. The boundaries between the strata have been established only at core/borehole locations. Between cores/boreholes the boundaries are assumed and may be subject to error.
3. Soils are described according to the MTO Soils Classification System.
4. Pavement borehole and core locations were established using experience and judgement.
5. Dimensions are in meters and/or millimetres unless otherwise shown. Stations are in kilometres and meters.
6. Abbreviations for boring and test data conform to OPSD 100.06.

W.P. 4084-13-01 EBL, 4083-13-01 WBL	CONTRACT	Raisin River Bridge Replacements, Highway 401 at Raisin River, Site No. 31-231.1 EBL and Site No. 31-231.2 WBL

ASPHALT CORE DATA

Golder Associates

Highway No.:	Highway 401	Sheet:	Page 1 of 4
Work Project No.	4083-13-01 WBL and 4084-13-01 EBL	Date:	November, 2017
Location:	Raisin River Bridges Site # 31-231.1 EBL and Site # 31-231.2 WBL, West of Lancaster	Job No.	1772182-2040
Party Chief: Steven Krieger/Jacob Bell			

STATION	OFFSET (m)	LOCATION		CORE LOG		COMMENT
	Referenced to Median C/L	EBL	WBL	Core Log (mm)	Total Thickness (mm)	
25+900	3.0 Lt	X		0-60 SP 19.0 60-95 HL 1 95-130 HL 4 130-185 HL 4 Mod. 185+ Concrete	185	-Lane 1
26+050	3.0 Lt	X		0-50 SP 19.0 50-80 HL 1 80-120 HL 4 120-170 HL 4 Mod. 170+ Concrete	170	-Lane 1
26+250	3.0 Lt	X		0-55 SP 19.0 55-100 HL 1 100-135 HL 4 135-170 HL 4 Mod. 170+ Concrete	170	-Lane 1
26+400	3.0 Lt	X		0-55 SP 19.0 55-85 HL 1 85-120 HL 4 120-150 HL 4 Mod. 150+ Concrete	150	-Lane 1
26+700	3.0 Lt	X		0-60 SP 19.0 60-95 HL 1 95-125 HL 4 125-140 HL 4 Mod. 140+ Concrete	140	-Lane 1

ASPHALT CORE DATA

Golder Associates

Highway No.:	Highway 401	Sheet:	Page 2 of 4
Work Project No.	4083-13-01 WBL and 4084-13-01 EBL	Date:	November, 2017
Location:	Raisin River Bridges Site # 31-231.1 EBL and Site # 31-231.2 WBL, West of Lancaster	Job No.	1772182-2040
Party Chief: Steven Krieger/Jacob Bell			

STATION	OFFSET (m)	LOCATION		CORE LOG		COMMENT
	Referenced to Median C/L	EBL	WBL	Core Log (mm)	Total Thickness (mm)	
26+744	3.0 Lt	X		0-30 SP 19.0 30-60 HL 1 60-110 HL 4 110+ Concrete	110	-Lane 1 -30 m West of Raisin River Bridge East Expansion Joint
26+764	3.0 Lt	X		0-50 SP 19.0 50-85 HL 1 85-120 HL 4 120+ Concrete	120	-Lane 1 -10 m West of Raisin River Bridge East Expansion Joint
26+773	3.0 Lt	X		0-55 SP 19.0 55-95 HL 1 95-130 HL 4 130+ Concrete	130	-Lane 1 -1 m West of Raisin River Bridge East Expansion Joint
26+831	3.0 Lt	X		0-40 SP 19.0 40+ Concrete	40	-Lane 1 -1 m East of Raisin River Bridge West Expansion Joint
26+840	3.0 Lt	X		0-50 SP 19.0 50+ Concrete	50	-Lane 1 -10 m East of Raisin River Bridge West Expansion Joint
26+860	3.0 Lt	X		0-50 SP 19.0 50-95 HL 1 95-150 HL 4 150+ Concrete	150	-Lane 1 -30 m East of Raisin River Bridge West Expansion Joint
27+050	3.0 Lt	X		0-35 SP 19.0 35-75 HL 1 75-110 HL 4 110-160 HL 4 160-200 HL 4 Mod. 200+ Concrete	200	-Lane 1
27+200	3.0 Lt	X		0-40 SP 19.0 40-80 HL 1 80-130 HL 4 130-165 HL 4 165-225 HL 4 Mod. 225+ Concrete	225	-Lane 1
27+400	3.0 Lt	X		0-40 SP 19.0 40-90 HL 1 90-135 HL 4 135-165 HL 4 165-220 HL 4 Mod. 220+ Concrete	220	-Lane 1
27+550	3.0 Lt	X		0-40 SP 19.0 40-90 HL 1 90-125 HL 4 125-190 HL 4 Mod. 190+ Concrete	190	-Lane 1
26+387	2.8 Rt		X	0-40 SP 19.0 40-80 HL 1 80-130 HL 4 130-200 HL 4 Mod. 200+ Concrete	200	-Lane 1
26+700	2.6 Rt		X	0-35 SP 19.0 35-80 HL 1 80-125 HL 4 125-180 HL 4 Mod. 180+ Concrete	180	-Lane 1 -Bottom 30 mm deteriorated
26+744	2.5 Rt		X	0-50 SP 19.0 50-110 HL 1 110-160 HL 4 Mod. 160+ Concrete	160	-Lane 1 -30 m West of Raisin River Bridge East Expansion Joint

ASPHALT CORE DATA

Golder Associates

Highway No.:	Highway 401	Sheet:	Page 4 of 4
Work Project No.	4083-13-01 WBL and 4084-13-01 EBL	Date:	November, 2017
Location:	Raisin River Bridges Site # 31-231.1 EBL and Site # 31-231.2 WBL, West of Lancaster	Job No.	1772182-2040
Party Chief: Steven Krieger/Jacob Bell			

STATION	OFFSET (m)	LOCATION		CORE LOG		COMMENT
	Referenced to Median C/L	EBL	WBL	Core Log (mm)	Total Thickness (mm)	
26+764	2.6 Rt		X	0-50 SP 19.0 50-110 HL 1 110-160 HL 4 160-195 HL 4 195+ Concrete	195	-Lane 1 -10 m West of Raisin River Bridge East Expansion Joint
26+773	2.5 Rt		X	0-55 SP 19.0 55-110 HL 1 110-140 HL 4 140-200 HL 4 200+ Concrete	200	-Lane 1 -1 m West of Raisin River Bridge East Expansion Joint
26+831	2.7 Rt		X	0-45 SP 19.0 45-85 HL 1 85-130 HL 4 130-170 HL 4 170+ Concrete	170	-Lane 1 -1 m East of Raisin River Bridge West Expansion Joint
26+840	2.9 Rt		X	0-60 SP 19.0 60+ Concrete	60	-Lane 1 -10 m East of Raisin River Bridge West Expansion Joint
26+860	2.5 Rt		X	0-50 SP 19.0 50-100 HL 1 100-140 HL 4 140+ Concrete	40	-Lane 1 -30 m East of Raisin River Bridge West Expansion Joint
27+050	2.7 Rt		X	0-30 SP 19.0 30-65 HL 1 65-110 HL 4 110-170 HL 4 170-215 HL 4 215+ Concrete	215	-Lane 1 -No HL 4 modified
27+200	2.7 Rt		X	0-35 SP 19.0 35-80 HL 1 80-140 HL 4 140-180 HL 4 180-230 HL 4 Mod. 230+ Concrete	230	-Lane 1 -Bottom 30 mm deteriorated
27+400	2.6 Rt		X	0-40 SP 19.0 40-80 HL 1 80-135 HL 4 135-175 HL 4 175-210 HL 4 Mod. 210+ Concrete	210	-Lane 1 -Bottom 15 mm deteriorated
27+550	2.6 Rt		X	0-40 SP 19.0 40-85 HL 1 85-140 HL 4 140-200 HL 4 200-245 HL 4 Mod. 245+ Concrete	245	-Lane 1 -Bottom 10 mm deteriorated

GOLDER PROJECT NO. 1211210193 Drawing file: S:\Clients\MTO\Hwy_401\99_PROJ\1772182_RaisinRiver\40_PROJ\0001_Soil_Data_Sheet\1772182-0001-BG-0001.dwg Jan 17, 2018 - 1:39pm
CREATED BY: NR MODIFIED:

METRIC

PLATE No.	
CONT.	2018-4008
G.W.P. No.	4013-11-00

SOIL DATA

SHEET 136

Golder Associates

PREPARED: JANUARY 2018

REVISED:

HIGHWAY 401 - RAISIN RIVER BRIDGE REPLACEMENTS

Highway 401: Raisin River
South Glengarry

Highway 401 - Eastbound

Station 25+850 to 27+550, Referenced to C/L of Highway 401 EBL

25+850 4.20 Lt C/L D-0 PA
0 - 160 Asph
160 - 730 Br Cr Gran
730 - 1.50 Br Si(y) Sa W Gr Occ Cob, Moist

26+050 12.10 Lt C/L D-750 HA
075 - 500 Br Si(y) Cl, Moist, Firm
500 - 1.20 Gry Si(y) Cl, Moist, Firm
0 - 025 Bullrush
025 - 075 Br Cl(y) Tps

26+100 2.50 Lt C/L D-0 PA
0 - 210 Asph
210 - 390 Conc
390 - 720 Br Cr Gran*
720 - 1.40 Br Si(y) Sa W Gr Occ Cob, Moist**
1.40 - 1.50 Br Si(y) Cl, Moist, Firm
* Sample Depth = 390 - 720
Passing 26.5 mm = 100 %
19.0 mm = 94 %
13.2 mm = 80 %
9.5 mm = 66 %
4.75 mm = 48 %
1.18 mm = 30 %
300 um = 17 %
75 um = 11 %
Borderline Accep Gran A (Dirty)
** Sample Depth = 720 - 1.40
Passing 4.75 mm = 94 %
2.00 mm = 88 %
425 um = 79 %
75 um = 30 %
5 um = 9 %
2 um = 7 %
Plasticity = Non-plastic
Classification = SM
Frost Susc. = LSFH
'K' Factor = 0.17

26+100 4.20 Lt C/L D-0 PA
0 - 180 Asph
180 - 710 Br Cr Gran
710 - 1.50 Br Si(y) Sa W Gr Occ Cob, Moist

26+250 11.50 Lt C/L D-1.00 HA
0 - 015 Water
015 - 050 Br Cl(y) Tps
050 - 1.20 Br Si(y) Cl, Moist, Firm

26+350 2.50 Lt C/L D-0 PA
0 - 160 Asph
160 - 390 Conc
390 - 800 Br Cr Gran
800 - 1.50 Br Si(y) Sa W Gr Occ Cob, Moist

26+350 4.20 Lt C/L D-0 PA
0 - 135 Asph
135 - 720 Br Cr Gran
720 - 1.50 Br Si(y) Sa W Gr Occ Cob, Moist

26+350 2.50 Rt C/L D-0 PA
0 - 150 Asph
150 - 400 Conc
400 - 650 Br Cr Gran
650 - 1.50 Br Sa W Gr Occ Cob, Moist

26+350 6.25 Rt C/L D-0 PA
0 - 225 Asph
225 - 525 Br Cr Gran W RAP
525 - 1.50 Br Si(y) Sa W Gr Occ Cob Occ Blds

26+400 12.00 Lt C/L D-1.00 HA
0 - 035 Br Cl(y) Tps
035 - 1.20 Br Si(y) Cl, Moist, Firm

26+500 12.30 Lt C/L D-1.00 HA
0 - 040 Br Cl(y) Tps
040 - 1.20 Br Si(y) Cl, Moist

26+600 2.30 Lt C/L D-0 PA
0 - 155 Asph
155 - 380 Conc
380 - 810 Br Cr Gran
810 - 1.50 Br Si(y) Sa W Gr Occ Cob, Moist

26+600 4.20 Lt C/L D-0 PA
0 - 150 Asph
150 - 550 Br Cr Gran
550 - 920 Br Gr(y) Sa
920 - 1.50 Br Si(y) Sa W Gr Occ Cob, Moist

26+600 11.00 Lt C/L D-1.00 HA
0 - 050 Br Cl(y) Tps
050 - 1.20 Gry Si(y) Cl Tr Gr, Moist, Firm

26+600 2.25 Rt C/L D-0 PA
0 - 165 Asph
165 - 425 Conc
425 - 700 Br Cr Gran
700 - 1.50 Br Sa W Gr Occ Cob, Moist

26+600 6.00 Rt C/L D-0 PA
0 - 085 Asph
085 - 600 Br Cr Gran W RAP
600 - 1.50 Br Sa W Gr Occ Cob Occ Blds, Moist

26+850 2.30 Lt C/L D-0 PA
0 - 130 Asph
130 - 350 Conc
350 - 760 Br Cr Gran
760 - 1.50 Br Si(y) Sa W Gr Occ Cob, Moist

26+850 4.20 Lt C/L D-0 PA
0 - 155 Asph
155 - 770 Br Cr Gran
770 - 1.50 Br Si(y) Sa W Gr Occ Cob, Moist

26+850 13.00 Lt C/L D-750 HA
0 - 100 Br Cl(y) Tps
100 - 1.20 Br Cl(y) Si, Moist, Comp*
* Sample Depth = 100 - 1.20
Passing 4.75 mm = 100 %
2.00 mm = 99 %
425 um = 98 %
75 um = 93 %
5 um = 50 %
2 um = 41 %
w = 34 %
WL = 39 % WP = 21 % IP = 18 %
Classification = CL-ML
Frost Susc. = MSFH
'K' Factor = 0.40

26+900 2.50 Rt C/L D-0 PA
0 - 150 Asph
150 - 450 Conc
450 - 750 Br Cr Gran
750 - 1.50 Br Sa(y) Si Tr Gr

26+900 7.00 Rt C/L D-0 PA
0 - 160 Asph
160 - 700 Br Cr Gran W RAP
700 - 1.50 Br Sa(y) Si Tr Gr

27+050 12.50 Lt C/L D-750 HA
0 - 075 Br Cl(y) Tps
075 - 1.20 Br Si(y) Cl, Moist, Firm

27+100 2.30 Lt C/L D-0 PA
0 - 210 Asph
210 - 420 Conc
420 - 720 Br Cr Gran*
720 - 1.05 Br Si(y) Sa W Gr Occ Cob, Moist
1.05 - 1.50 Br Gry Sa(y) Si W Cl, Moist**
* Sample Depth = 420 - 720
Passing 26.5 mm = 100 %
19.0 mm = 98 %
13.2 mm = 94 %
9.5 mm = 79 %
4.75 mm = 55 %
1.18 mm = 35 %
300 um = 22 %
75 um = 14 %
Unaccep Gran A (Dirty)
** Sample Depth = 1.05 - 1.15
Passing 4.75 mm = 97 %
2.00 mm = 92 %
425 um = 85 %
75 um = 74 %
5 um = 22 %
2 um = 17 %
w = 26 %
Plasticity = Non-plastic
Classification = ML
Frost Susc. = MSFH
'K' Factor = 0.48

27+100 4.20 Lt C/L D-0 PA
0 - 160 Asph
160 - 260 Br Cr Gran W RAP
260 - 740 Br Gr(y) Sa Tr Si, Moist
740 - 1.50 Br Gry Sa(y) Si, Moist

27+100 5.70 Rt C/L D-0 PA
0 - 425 Asph
425 - 750 Br Cr Gran
750 - 950 Br Sa W Gr
950 - 950 NFP Concrete (Possible)

27+100 9.50 Rt C/L D-0 PA
0 - 100 Asph
100 - 700 Br Cr Gran W RAP
700 - 1.50 Br Sa(y) Si Tr Gr

27+200 11.50 Lt C/L D-750 HA
0 - 030 Br Cl(y) Tps
030 - 700 Br Si(y) Cl, Moist, Firm
700 - 1.20 Gry Si(y) Cl, Moist, Firm

27+250 2.30 Lt C/L D-0 PA
0 - 230 Asph
230 - 420 Conc
420 - 690 Br Cr Gran
690 - 1.50 Gry Br Si(y) Cl, Moist, Firm

27+250 4.20 Lt C/L D-0 PA
0 - 150 Asph
150 - 260 Br Cr Gran W RAP
260 - 710 Br Gry Sa Tr Si, Moist
710 - 1.50 Br Gry Si(y) Cl, Moist, Firm

27+250 6.25 Rt C/L D-0 PA
0 - 400 Asph
400 - 700 Br Cr Gran*
700 - 1.20 Br Cl(y) Si W Sa, Moist**
- 1.20 NFP Blds, Moist EBL Speed change
Passing 4.75 mm = 99 %
2.00 mm = 97 %
425 um = 94 %
75 um = 84 %
5 um = 30 %
2 um = 23 %
w = 27 %
Plasticity = Non-plastic
Classification = ML
Frost Susc. = MSFH
'K' Factor = 0.54
* Sample Depth = 400 - 700
Passing 26.5 mm = 100 %
19.0 mm = 100 %
13.2 mm = 90 %
9.5 mm = 77 %
4.75 mm = 56 %
1.18 mm = 34 %
300 um = 20 %
75 um = 12 %
Unaccep Gran A (Fine & Dirty)
** Sample Depth = 700 - 1.20

27+250 9.75 Rt C/L D-0 PA
0 - 095 Asph
095 - 900 Br Cr Gran W RAP
900 - 1.50 Gry SI(y) Sa W Cl W Gr, Moist

27+350 2.30 Lt C/L D-0 PA
0 - 230 Asph
230 - 460 Conc
460 - 880 Br Cr Gran
880 - 1.50 Gry Si(y) Sa W Cl W Gr Tr Org M, Moist*
* Sample Depth = 880 - 1.50
Passing 4.75 mm = 84 %
2.00 mm = 78 %
425 um = 69 %
75 um = 55 %
5 um = 25 %
2 um = 20 %
w = 20 %
WL = 28 % WP = 15 % IP = 13 %
Classification = SM
Frost Susc. = LSFH
'K' Factor = 0.25

27+350 4.20 Lt C/L D-0 PA
0 - 180 Asph
180 - 300 Br Cr Gran W RAP
300 - 700 Br Gry Sa Tr Si, Moist
700 - 1.50 Br Gry Si(y) Sa W Cl W Gr Tr Org M, Moist

27+350 9.75 Rt C/L D-0 PA
0 - 200 Asph
200 - 700 Br Cr Gran
700 - 1.50 Br Sa W Gr Occ Cob, Moist

27+400 12.00 Lt C/L D-750 HA
0 - 020 Br Cl(y) Tps
020 - 500 Br Si(y) Cl, Moist, Firm
500 - 500 NFP Blds

27+400 6.00 Rt C/L D-0 PA
0 - 200 Asph
200 - 700 Br Cr Gran W RAP
700 - 1.20 Br Sa W Gr Occ Cob, Moist
1.20 - 1.50 Gry Si(y) Cl, Moist, Firm

27+500 2.30 Lt C/L D-0 PA
0 - 180 Asph
180 - 420 Conc
420 - 870 Br Gr(y) Sa Tr Si
870 - 1.50 Br Gry Si(y) Cl, Moist, Firm

27+500 5.00 Lt C/L D-0 PA
0 - 120 Asph
120 - 290 Br Cr Gran W RAP
290 - 1.00 Br Gry Sa
1.00 - 1.50 Br Gry Si(y) Cl, Moist, Firm

27+550 12.20 Lt C/L D-1.00 HA
0 - 030 Water
030 - 060 Br Cl(y) Tps W Org M
060 - 550 Br Si(y) Cl, Moist, Firm
550 - 550 NFP Blds

Highway 401: Raisin River
South Glengarry

Highway 401 - Westbound

Station 10+050 to 27+500, Referenced to C/L of Highway 401 WBL

10+050 5.80 Lt C/L D-0 PA
0 - 370 Asph
370 - 660 Br Cr Gran
660 - 1.50 Br Si(y) Sa W Gr, Moist

10+100 9.00 Lt C/L D-0 PA
0 - 110 Asph
110 - 230 Br Cr Gran W RAP
230 - 800 Br Gr(y) Sa, Moist
800 - 1.50 Br Si(y) Cl, Moist, Firm

10+100 17.00 Lt C/L D-1.00 HA
0 - 215 Dk Br Cl(y) Tps
215 - 1.50 Br Si(y) Cl, Moist, Firm

10+250 9.00 Lt C/L D-0 PA
0 - 140 Asph
140 - 200 Br Cr Gran W RAP
200 - 710 Br Gr(y) Sa
710 - 950 Br Si(y) Cl, Moist, Firm
950 - 950 NFP Boudlers

10+250 16.00 Lt C/L D-1.00 HA
0 - 200 Br Cl(y) Tps
200 - 1.20 Br Si(y) Cl, Moist, Firm

26+325 2.70 Rt C/L D-0 PA
0 - 195 Asph
195 - 415 Conc
415 - 805 Br Cr Gran*
805 - 1.50 Br Si(y) Sa W Gr, Moist**
* Sample Depth = 415 - 805
Passing 26.5 mm = 100 %
19.0 mm = 98 %
13.2 mm = 91 %
9.5 mm = 75 %
4.75 mm = 54 %
1.18 mm = 35 %
300 um = 22 %
75 um = 13 %
Unaccep Gran A (Dirty)
** Sample Depth = 805 - 1.50
Passing 4.75 mm = 69 %
2.00 mm = 59 %
425 um = 42 %
75 um = 23 %
Classification = SM
Frost Susc. = LSFH
'K' Factor = 0.15

26+325 4.10 Rt C/L D-0 PA
0 - 160 Asph
160 - 810 Br Cr Gran
810 - 1.50 Br Si(y) Sa Tr Cl Tr Gr, Moist

26+500 2.10 Lt C/L D-0 PA
0 - 165 Asph
165 - 415 Conc
415 - 850 Br Cr Gran
850 - 1.50 Br Si(y) Sa W Gr, Moist

26+600 2.50 Rt C/L D-0 PA
0 - 200 Asph
200 - 420 Conc
420 - 815 Br Cr Gran
815 - 1.50 Br Si(y) Sa W Gr Occ Cob, Moist

26+675 2.10 Lt C/L D-0 PA
0 - 200 Asph
200 - 420 Conc
420 - 750 Br Cr Gran
750 - 1.50 Br Si(y) Sa W Gr, Moist

26+850 2.70 Rt C/L D-0 PA
0 - 140 Asph
140 - 340 Conc
340 - 650 Br Cr Gran
650 - 1.50 Br Si(y) Sa W Cl W Gr, Moist, Firm*
* Sample Depth = 650 - 1.50
Passing 4.75 mm = 76 %
2.00 mm = 62 %
425 um = 47 %
75 um = 38 %
5 um = 19 %
2 um = 15 %
w = 14 %
WL = 28 % WP = 15 % IP = 13 %
Classification = SM/ML/CL
Frost Susc. = LSFH
'K' Factor = 0.18

26+850 4.50 Rt C/L D-0 PA
0 - 135 Asph
135 - 525 Br Cr Gran W RAP
525 - 650 Br Sa(y) Gr Occ Cob
650 - 1.50 Br Si(y) Sa W Cl, Moist, Firm

26+875 4.10 Lt C/L D-0 PA
0 - 175 Asph
175 - 575 Br Cr Gran W RAP
575 - 1.50 Br Si(y) Cl, Moist, Firm

26+900 4.10 Rt C/L D-0 PA
0 - 160 Asph
160 - 625 Br Cr Gran W RAP
625 - 950 Br Si(y) Sa W Gr Occ Cob, Moist
950 - 1.50 Br Si(y) Cl W Sa Tr Gr, Moist, Firm

27+100 6.00 Lt C/L D-0 PA
0 - 200 Asph
200 - 400 Conc
400 - 800 Br Cr Gran
800 - 1.50 Br Gry Si(y) Sa W Gr Tr Cl, Moist

27+100 9.00 Lt C/L D-0 PA
0 - 160 Asph
160 - 400 Br Cr Gran W RAP
400 - 1.15 Br Si(y) Sa W Gr, Moist
1.15 - 1.50 Br Gry Cl(y) Si Tr Sa, Moist*
* Sample Depth = 1.15 - 1.50
Passing 4.75 mm = 99 %
2.00 mm = 99 %
425 um = 97 %
75 um = 91 %
5 um = 42 %
2 um = 37 %
w = 21 %
WL = 32 % WP = 15 % IP = 17 %
Classification = ML-CI
Frost Susc. = MSFH

27+100 2.70 Rt C/L D-0 PA
0 - 200 Asph
200 - 410 Conc
410 - 800 Br Cr Gran
800 - 1.50 Br Si(y) Sa W Gr Occ Cob, Moist

27+100 4.10 Rt C/L D-0 PA
0 - 185 Asph
185 - 500 Br Cr Gran W RAP
500 - 1.20 Br Si(y) Sa W Gr Occ Cob Occ Blds, Moist
- 1.20 NFP Blds Paved Shoulder

27+200 6.00 Lt C/L D-0 PA
0 - 220 Asph
220 - 400 Conc
400 - 750 Br Cr Gran*
750 - 1.50 Br Si(y) Sa W Cl W Gr Occ Cob, Moist**
* Sample Depth = 400 - 750
Passing 26.5 mm = 100 %
19.0 mm = 93 %
13.2 mm = 88 %
9.5 mm = 78 %
4.75 mm = 61 %
1.18 mm = 39 %
300 um = 26 %
75 um = 17 %
Unaccep Gran A (Fine & Dirty)
** Sample Depth = 750 - 1.50
Passing 4.75 mm = 77 %
2.00 mm = 63 %
425 um = 52 %
75 um = 38 %
5 um = 16 %
2 um = 14 %
Plasticity = Non-plastic
Classification = SM
Frost Susc. = LSFH
'K' Factor = 0.16
750 - 1.50 Br Si(y) Sa W Cl Tr Gr, Moist

27+500 4.10 Rt C/L D-0 PA
0 - 190 Asph
190 - 530 Br Cr Gran W RAP
530 - 1.50 Br Si(y) Sa W Cl Tr Gr Occ Cob, Moist

Drawing file: S:\Clients\MTO\Hwy_401\99_PROJ\1772182_RaisinRiver\40_PROD\0001_Soil_Data_Sheet\1772182-0001-BG-0001.dwg Jan 17, 2018 - 1:39pm
MODIFIED
GOLDER PROJECT NO. 1211210193
CREATED BY: NR

METRIC

PLATE No.	
CONT.	2018-4008
G.W.P. No.	4013-11-00

SOIL DATA	SHEET 137
Golder Associates	PREPARED: JANUARY 2018
	REVISED:

HIGHWAY 401 - RAISIN RIVER BRIDGE REPLACEMENTS

27+200 8.20 Lt C/L D-0 PA

0	- 170	Asph
170	- 500	Br Cr Gran W RAP
500	- 1.00	Br Si(y) Sa W Gr, Moist
1.00	- 1.50	Br Gry Si(y) Cl Tr Gr, Moist, Firm

27+250 4.10 Rt C/L D-0 PA

0	- 200	Asph
200	- 600	Br Cr Gran W RAP*
600	- 1.50	Br Gr(y) Sa W Si Tr Cl, Moist to Wet**

* Sample Depth = 200 - 600
Passing 26.5 mm = 100 %
19.0 mm = 100 %
13.2 mm = 95 %
9.5 mm = 77 %
4.75 mm = 54 %
1.18 mm = 30 %
300 um = 11 %
75 um = 3 %
Accep Gran A

** Sample Depth = 600 - 1.50
Passing 4.75 mm = 67 %
2.00 mm = 53 %
425 um = 37 %
75 um = 23 %
5 um = 7 %
2 um = 5 %
Plasticity = Non-plastic
Classification = SM
Frost Susc. = LSFH
'K' Factor = 0.15

27+275 8.40 Lt C/L D-0 PA

0	- 160	Asph
160	- 420	Br Cr Gran W RAP
420	- 1.20	Br Si(y) Sa W Gr
1.20	- 1.50	Gry Si(y) Cl

27+350 2.75 Rt C/L D-0 PA

0	- 200	Asph
200	- 410	Conc
410	- 730	Br Cr Gran
730	- 1.50	Br Si(y) Sa W Gr Occ Cob, Moist

27+350 4.10 Rt C/L D-0 PA

0	- 200	Asph
200	- 650	Br Cr Gran W RAP
650	- 1.50	Br Si(y) Sa W Gr, Moist

27+450 2.50 Lt C/L D-0 PA

0	- 210	Asph
210	- 540	Conc
540	- 680	Br Cr Gran
680	- 980	Br Si(y) Sa W Gr Occ Cob, Moist
980	- 1.50	Br Gry Si(y) Cl, Moist, Firm

27+450 5.00 Lt C/L D-0 PA

0	- 380	Asph
380	- 620	Br Cr Gran
620	- 1.50	Br Si(y) Sa W Gr Occ Cob, Moist

27+500 2.30 Rt C/L D-0 PA

0	- 180	Asph
180	- 440	Conc
440	-750	Br Cr Gran

GOLDER PROJECT NO. 1211210193
CREATED BY: NR
Drawing file: S:\Clients\MTO\Hwy_401\99_PROJ\1772182_RaisinRiver\40_PROD\0001_Soil_Data_Sheet\1772182-0001-BG-0001.dwg Jan 17, 2018 - 1:39pm
MODIFIED:

METRIC

PLATE No.	
CONT.	2018-4008
W.P. No.	4013-11-00
SOIL DATA	SHEET 138
Golder Associates	PREPARED: MARCH 2018
	REVISED:

HIGHWAY 401 - FINNEY CREEK CULVERT REHABILITATION

GEOTECHNICAL SURVEY DATA

DATE OF SURVEY	TYPE OF SURVEY
Soils Boreholes: January 2018 Pavement Core Holes: January 2018	Golder Associates Ltd. Soil Boreholes: (Power Auger – PA, Hand Auger - HA) Core Holes: Rotary Drill

NOTES

1. Conditions and pavement depths apply only to the date of the survey.
2. The boundaries between the strata have been established only at core/borehole locations. Between cores/boreholes the boundaries are assumed and may be subject to error.
3. Soils are described according to the MTO Soils Classification System.
4. Pavement borehole and core locations were established using experience and judgement.
5. Dimensions are in meters and/or millimetres unless otherwise shown. Stations are in kilometres and meters.
6. Abbreviations for boring and test data conform to OPSD 100.06.

W.P. 4183-11-01	CONTRACT	Finney Creek Culvert Rehabilitation, Highway 401 - Site 31-260/C

ASPHALT CORE DATA

Golder Associates

Highway No.:	Highway 401	Sheet:	Page 1 of 3
Work Project No.	4183-11-01	Date:	January, 2018
Location:	Finney Creek: Site # 31-260/C, East of Lancaster	Job No.	1772182-2130
Party Chief: Steven Krieger/Jacob Bell			

STATION	OFFSET (m)	LOCATION		CORE LOG		COMMENT
	Referenced to Lane C/L	EBL	WBL	Core Log (mm)	Total Thickness (mm)	
11+200	2.2 Lt	X		0-40 SP 12.5 FC2 40-105 HL 1 105-150 HL 4 150-210 HL 4 mod. 210+ Concrete	210	-Lane 1 -Bottom 15 mm HL 4 modified deteriorated
11+200	4.1 Lt	X		0-35 SP 12.5 FC2 35-85 HL 1 85-145 HL 4 145+ Gravel	145	-Median Partial Paved Shoulder
11+200	2.6 Rt	X		0-45 SP 12.5 FC2 45-95 HL 1 95-185 HL 4 185-245 HL 4 mod. 245+ Concrete	245	-Lane 2 -Bottom 30 mm HL 4 modified deteriorated
11+200	6.0 Rt	X		0-35 SP 12.5 FC2 35-90 HL 1 90-145 HL 4 145+ Gravel	145	-Outside Fully Paved Shoulder
11+300	2.2 Lt	X		0-40 SP 12.5 FC2 40-85 HL 1 85-130 HL 4 130-220 HL 4 220-275 HL 4 mod. 275+ Concrete	275	-Lane 1

ASPHALT CORE DATA

Golder Associates

Highway No.:	Highway 401	Sheet:	Page 2 of 3
Work Project No.	4183-11-01	Date:	January, 2018
Location:	Finney Creek: Site # 31-260/C, East of Lancaster	Job No.	1772182-2130
Party Chief: Steven Krieger/Jacob Bell			

STATION	OFFSET (m)	LOCATION		CORE LOG		COMMENT
	Referenced to Lane C/L	EBL	WBL	Core Log (mm)	Total Thickness (mm)	
11+300	4.1 Lt	X		0-35 SP 12.5 FC2 35-90 HL 1 90-155 HL 4 155-235 HL 4 235+ Gravel	235	-Median Partial Paved Shoulder
11+300	2.5 Rt	X		0-50 SP 12.5 FC2 50-100 HL 1 100-165 HL 4 165-250 HL 4 mod. 250+ Concrete	250	-Lane 2
11+300	5.8 Rt	X		0-40 SP 12.5 FC2 40-75 HL 1 75-135 HL 4 135+ Gravel	135	-Outside Fully Paved Shoulder
11+200	2.5 Rt		X	0-35 SP 12.5 FC2 35-70 HL 1 70-120 HL 4 120-165 HL 4 165-220 HL 4 mod. 220+ Concrete	220	-Lane 1 -Bottom 50 mm HL 4 modified deteriorated
11+200	4.4 Rt		X	0-35 SP 12.5 FC2 35-80 HL 1 80-155 HL 4 155+ Gravel	155	-Median Partial Paved Shoulder
11+200	2.3 Lt		X	0-30 SP 12.5 FC2 30-70 HL 1 70-120 HL 4 120-175 HL 4 175-235 HL 4 mod. 235+ Concrete	235	-Lane 2
11+200	4.4 Lt		X	0-35 SP 12.5 FC2 35-75 HL 1 75-120 HL 4 120-180 HL 4 180+ Gravel	180	-Outside Fully Paved Shoulder
11+300	2.5 Rt		X	0-40 SP 12.5 FC2 40-80 HL 1 80-115 HL 4 115-160 HL 4 160-220 HL 4 mod. 220+ Concrete	220	-Lane 1 -Bottom 50 mm HL 4 modified deteriorated
11+300	4.3 Rt		X	0-30 SP 12.5 FC2 30-95 HL 1 95-155 HL 4 155+ Gravel	155	-Median Partial Paved Shoulder
11+300	2.2 Lt		X	0-25 SP 12.5 FC2 25-65 HL 1 65-115 HL 4 115-180 HL 4 180-250 HL 4 mod. 250+ Concrete	250	-Lane 2
11+300	4.3 Lt		X	0-40 SP 12.5 FC2 40-100 HL 1 100-150 HL 4 150-205 HL 4 205+ Gravel	205	-Outside Fully Paved Shoulder

GOLDER PROJECT NO. 1772182
CREATED BY: NR
Drawing file: S:\Clients\MTO\Hwy_401\99_PROJ\1772182-2130-Finney-Creek\40_PROD\0001_Soil_DataSheet\1772182-0001-BG-0001.dwg Mar 27, 2018 - 9:31pm
MODIFIED:

METRIC

PLATE No.	
CONT.	2018-4008
W.P. No.	4013-11-00

SOIL DATA	SHEET 139
Golder Associates	PREPARED: MARCH 2018
	REVISED:

HIGHWAY 401 - FINNEY CREEK CULVERT REHABILITATION

Finney Creek Culvert Rehabilitation
South Glengarry Township

Highway 401 - Westbound

Station 11+100 to 11+400, Referenced to C/L of Highway 401 Westbound

11+100 4.60 Lt C/L D-0 PA

0	- 210	Asph
210	- 540	Br Cr Gran
540	- 710	Br Sa W Gr
710	- 1.50	Br Si Sa Tr Cl Tr Gr

11+100 2.50 Rt C/L D-0 PA

0	- 215	Asph
215	- 475	Conc
475	- 650	Br Cr Gran
650	- 850	Br Si Sa Tr Gr
850	- 1.50	Br Si Sa

11+150 2.50 Lt C/L D-0 PA

0	- 265	Asph
265	- 510	Conc
510	- 850	Br Cr Gran
850	- 1.00	Br Sa W Gr
1.00	- 1.50	Br Si Sa Tr Cl Tr Gr

11+150 4.60 Lt C/L D-0 PA

0	- 230	Asph
230	- 525	Br Cr Gran
525	- 775	Br Sa W Gr
775	- 1.50	Br Si Sa Tr Cl Tr Gr

11+150 2.40 Rt C/L D-0 PA

0	- 240	Asph
240	- 450	Conc
450	- 820	Br Cr Gran
820	- 1.50	Br Sa W Gr

11+150 4.30 Rt C/L D-0 PA

0	- 240	Asph
240	- 520	Br Cr Gran W RAP
520	- 620	Br Sa W Gr
620	- 1.50	Br Si Sa

11+200 11.50 Rt C/L D-600 HA

0	- 085	Br Cl Tps, Frozen
085	- 250	Br Cl Si, Frozen
-	250	NFP Frozen

11+243 2.50 Lt C/L D-0 PA

0	- 270	Asph
270	- 560	Conc
560	- 900	Br Cr Gran
900	- 1.00	Br Sa Tr Gr
1.00	- 1.10	Br Si Sa Tr Cl Tr Gr
1.10	- 1.50	Br Cl Si Tr Gr, Moist, Comp

11+243 4.60 Lt C/L D-0 PA

0	- 220	Asph
220	- 540	Br Cr Gran
540	- 1.00	Br Sa W Gr
1.00	- 2.70	Br Si Sa Tr Cl
2.70	- 3.00	Br Cl Si, Moist, Comp*

* Sample Depth = 2.70 - 3.00
Passing 4.75 mm = 93 %
2.00 mm = 89 %
425 um = 83 %
75 um = 74 %
5 um = 29 %
2 um = 22 %
w = 23 %
WL = 28 % WP = 18 % IP = 9 %
Classification = CL-ML
Frost Susc. = MSFH
'K' Factor = 0.33

11+243 2.40 Rt C/L D-0 PA

0	- 240	Asph
240	- 460	Conc
460	- 810	Br Cr Gran
810	- 1.50	Br Sa W Gr

11+243 4.20 Rt C/L D-0 PA

0	- 225	Asph
225	- 550	Br Cr Gran W RAP
550	- 800	Br Sa W Gr
800	- 1.30	Br Cl Si, Moist, Comp*
1.30	- 1.50	Br Cl Si, Moist, Comp**

* Sample Depth = 800 - 1.30
Passing 4.75 mm = 100 %
2.00 mm = 98 %
425 um = 95 %
75 um = 79 %
Classification = CL-ML
Frost Susc. = MSFH

** Sample Depth = 1.30 - 1.50
Passing 4.75 mm = 100 %
2.00 mm = 99 %
425 um = 97 %
75 um = 84 %
5 um = 28 %
2 um = 25 %
w = 25 %
WL = 26 % WP = 18 % IP = 8 %
Classification = CL-ML
Frost Susc. = MSFH

11+243 11.00 Rt C/L D-600 HA

0	- 060	Br Cl Tps, Frozen
060	- 400	Br Cl Si, Frozen
-	400	NFP Frozen

11+275 2.50 Lt C/L D-0 PA

0	- 250	Asph
250	- 550	Conc
550	- 775	Br Cr Gran
775	- 1.20	Br Sa W Gr
1.20	- 1.50	Br Si Sa Tr Cl Tr Gr

11+275 4.70 Lt C/L D-0 PA

0	- 200	Asph
200	- 450	Br Cr Gran W RAP
450	- 600	Br Sa W Gr Occ Cob
-	600	NFP Blds

11+275 2.30 Rt C/L D-0 PA

0	- 320	Asph
320	- 525	Conc
525	- 910	Br Cr Gran
910	- 1.50	Br Sa W Gr

11+275 4.30 Rt C/L D-0 PA

0	- 250	Asph
250	- 600	Br Cr Gran W RAP
600	- 1.20	Br Sa W Gr
1.20	- 1.50	Br Si Sa Tr Gr

11+275 12.00 Rt C/L D-600 HA

0	- 080	Br Cl Tps, Frozen
080	- 500	Br Cl Si, Frozen
-	500	NFP Frozen

11+300 9.00 Rt C/L D-500 HA

0	- 050	Br Cl Tps, Frozen
050	- 350	Br Si Sa W Gr, Frozen*
-	350	NFP Frozen

* Sample Depth = 350 - 350
Passing 4.75 mm = 72 %
2.00 mm = 60 %
425 um = 48 %
75 um = 33 %
5 um = 11 %
2 um = 7 %
w = 18 %
Plasticity = Non-plastic
Classification = SM
Frost Susc. = LSFH
'K' Factor = 0.15

11+350 2.60 Lt C/L D-0 PA

0	- 270	Asph
270	- 480	Conc
480	- 850	Br Cr Gran
850	- 1.00	Br Sa W Gr Occ Cob
1.00	- 1.50	Br Si Sa Tr Cl Tr Gr

11+350 4.70 Lt C/L D-0 PA

0	- 230	Asph
230	- 615	Br Cr Gran W RAP
615	- 730	Br Sa W Gr
730	- 1.50	Br Si Sa W Gr Tr Cl

11+350 2.40 Rt C/L D-0 PA

0	- 215	Asph
215	- 410	Conc
410	- 730	Br Cr Gran
730	- 1.50	Br Sa Tr Gr

11+350 4.30 Rt C/L D-0 PA

0	- 160	Asph
160	- 270	Br Cr Gran W RAP
270	- 750	Br Sa Tr Gr
-	750	NFP Blds

11+400 4.70 Lt C/L D-0 PA

0	- 170	Asph
170	- 415	Br Cr Gran W RAP
415	- 810	Br Sa W Gr Occ Cob
810	- 1.50	Br Si Sa Tr Cl Tr Gr

11+400 2.20 Rt C/L D-0 PA

0	- 200	Asph
200	- 425	Conc
425	- 740	Br Cr Gran*
740	- 1.50	Br Sa Tr Gr

* Sample Depth = 425 - 740
Passing 26.5 mm = 100 %
19.0 mm = 100 %
13.2 mm = 100 %
9.5 mm = 95 %
4.75 mm = 69 %
1.18 mm = 47 %
300 um = 30 %
75 um = 18 %
Unaccep Gran A (Fine & Dirty)

11+400 9.50 Rt C/L D-500 HA

0	- 050	Br Cl Tps, Frozen
050	- 400	Br Cl Si, Frozen
-	400	NFP Frozen

Finney Creek Culvert Rehabilitation
South Glengarry Township

Highway 401 - Eastbound

Station 11+100 to 11+400, Referenced to C/L of Highway 401 Eastbound

11+100 2.60 Lt C/L D-0 PA

0	- 210	Asph
210	- 465	Conc
465	- 690	Br Cr Gran
690	- 1.20	Br Sa W Gr Occ Cob
-	1.20	NFP Blds

11+100 1.80 Rt C/L D-0 PA

0	- 175	Asph
175	- 380	Br Cr Gran
380	- 560	Br Sa W Gr
560	- 950	Br Si Sa Tr Cl Tr Gr
-	950	NFP Blds

11+150 2.50 Lt C/L D-0 PA

0	- 200	Asph
200	- 430	Conc
430	- 620	Br Cr Gran
620	- 850	Br Sa W Gr Occ Cob
850	- 1.50	Br Si Sa Tr Cl Tr Gr

11+150 4.70 Lt C/L D-0 PA

0	- 175	Asph
175	- 400	Br Cr Gran W RAP
400	- 610	Br Sa W Gr Occ Cob
610	- 1.20	Br Si Sa W Gr
1.20	- 1.50	Br Si Sa Tr Cl Tr Gr

11+150 1.90 Rt C/L D-0 PA

0	- 200	Asph
200	- 460	Conc
460	- 810	Br Cr Gran
810	- 1.30	Br Sa W Gr
1.30	- 1.50	Br Si Sa Tr Cl Tr Gr

11+150 5.50 Rt C/L D-0 PA

0	- 190	Asph
190	- 390	Br Cr Gran
390	- 520	Br Sa W Gr Occ Cob
520	- 1.50	Br Si Sa Tr Cl Tr Gr

11+200 5.50 Rt C/L D-0 PA

0	- 250	Asph
250	- 540	Br Cr Gran*
540	- 780	Br Si Sa W Gr**
780	- 2.60	Br Si Sa Tr Cl Tr Gr
2.60	- 3.00	Br Cl Si Tr Org M, Moist, Comp

* Sample Depth = 250 - 540
Passing 26.5 mm = 100 %
19.0 mm = 100 %
13.2 mm = 100 %
9.5 mm = 98 %
4.75 mm = 90 %
1.18 mm = 71 %
300 um = 42 %
75 um = 21 %
Unaccep Gran A (Fine & Dirty)

** Sample Depth = 540 - 780
Passing 4.75 mm = 88 %
2.00 mm = 64 %
425 um = 55 %
75 um = 36 %
Classification = SM
Frost Susc. = LSFH

11+233 2.60 Lt C/L D-0 PA

0	- 200	Asph
200	- 475	Conc
475	- 700	Br Cr Gran
700	- 920	Br Sa W Gr Occ Cob
920	- 1.50	Br Si Sa Tr Cl Tr Gr

11+233 4.60 Lt C/L D-0 PA

0	- 220	Asph
220	- 450	Br Cr Gran W RAP
450	- 980	Br Sa W Gr Occ Cob
980	- 1.20	Br Si Sa W Gr
1.20	- 1.50	Br Si Sa W Cl Tr Gr

11+233 1.90 Rt C/L D-0 PA

0	- 220	Asph
220	- 430	Conc
430	- 810	Br Cr Gran
810	- 960	Br Sa W Gr
960	- 1.50	Br Si Sa Tr Cl Tr Gr

11+233 5.70 Rt C/L D-0 PA

0	- 200	Asph
200	- 375	Br Cr Gran
375	- 515	Br Sa W Gr Occ Cob
515	- 1.50	Br Si Sa Tr Cl Tr Gr

11+233 7.00 Rt C/L D-50.00 PA

0	- 310	Br Cr Gran
310	- 580	Br Sa W Gr
580	- 2.80	Br Si Sa W Cl Tr Gr, Moist
2.80	- 3.00	Br Cl Si Tr Org M, Moist, Comp

11+275 2.50 Lt C/L D-0 PA

0	- 230	Asph
230	- 490	Conc
490	- 820	Br Cr Gran
820	- 1.00	Br Sa W Gr Occ Cob
1.00	- 1.50	Br Si Sa Tr Cl Tr Gr

11+275 4.70 Lt C/L D-0 PA

0	- 195	Asph
195	- 390	Br Cr Gran W RAP
390	- 560	Br Sa W Gr Occ Cob
560	- 1.20	Br Si Sa W Gr Occ Cob
1.20	- 1.50	Br Cl Si W Sa, Moist, Comp*

* Sample Depth = 1.20 - 1.50
Passing 4.75 mm = 100 %
2.00 mm = 99 %
425 um = 97 %
75 um = 88 %
Classification = CL-ML
Frost Susc. = MSFH

11+275 1.90 Rt C/L D-0 PA

0	- 210	Asph
210	- 460	Conc
460	- 790	Br Cr Gran
790	- 1.00	Br Sa W Gr
1.00	- 1.50	Br Si Sa Tr Cl Tr Gr

11+275 5.60 Rt C/L D-0 PA

0	- 180	Asph
180	- 600	Br Cr Gran
600	- 1.50	Br Sa W Gr Occ Cob

11+275 7.00 Rt C/L D-50.00 PA

0	- 300	Br Cr Gran
300	- 560	Br Sa W Gr
560	- 3.00	Br Si Sa Tr Cl Tr Gr

11+300 5.60 Rt C/L D-0 PA

0	- 125	Asph
125	- 710	Br Cr Gran
710	- 3.00	Br Si Sa Tr Cl Tr Gr

11+350 2.50 Lt C/L D-0 PA

0	- 250	Asph
250	- 470	Conc
470	- 810	Br Cr Gran
810	- 1.10	Br Sa W Gr Occ Cob
1.10	- 1.50	Br Si Sa Tr Cl Tr Gr

11+350 4.60 Lt C/L D-0 PA

0	- 225	Asph
225	- 390	Br Cr Gran W RAP
390	- 1.30	Br Sa W Gr Occ Cob
1.30	- 1.60	Br Cl Si*
1.60	- 3.00	Br Gry Cl Si Tr Org M, Moist, Comp**

* Sample Depth = 1.30 - 1.60
Passing 4.75 mm = 100 %
2.00 mm = 97 %
425 um = 94 %
75 um = 84 %
Classification = CL-ML
Frost Susc. = MSFH

** Sample Depth = 1.60 - 3.00
Passing 4.75 mm = 100 %
2.00 mm = 99 %
425 um = 98 %
75 um = 80 %
5 um = 28 %
2 um = 25 %
w = 26 %
WL = 27 % WP = 17 % IP = 10 %
Classification = CL-ML
Frost Susc. = MSFH
'K' Factor = 0.40

11+350 2.00 Rt C/L D-0 PA

0	- 275	Asph
275	- 510	Conc
510	- 840	Br Cr Gran
840	- 1.20	Br Sa W Gr
1.20	- 1.50	Br Si Sa Tr Cl Tr Gr

11+350 5.80 Rt C/L D-0 PA

0	- 175	Asph
175	- 430	Br Cr Gran
430	- 950	Br Sa W Gr Occ Cob
-	950	NFP Blds

11+400 2.60 Lt C/L D-0 PA

0	- 220	Asph
220	- 525	Conc
525	- 810	Br Cr Gran
810	- 1.30	Br Sa W Gr Occ Cob
-	1.30	NFP Blds

11+400 5.80 Rt C/L D-0 PA

0	- 155	Asph
155	- 415	Br Cr Gran
415	- 720	Br Sa W Gr Occ Cob
720	- 1.50	Br Si Sa Tr Cl Tr Gr

GOLDER PROJECT NO. 1772182
CREATED BY: NR
Drawing file: S:\Clients\MTO\Hwy_401\99_PROJ\1772182-2130-Finney-Creek\40_PROD\0001_Soil_DataSheet\1772182-0001-BG-0001.dwg
MODIFIED:
Mar 27, 2018 - 9:35pm

METRIC

PLATE No.	
CONT.	2018-4008
G.W.P. No.	4013-11-00
SOIL DATA	SHEET 140
Golder Associates	PREPARED: DECEMBER 2017
	REVISED:

HIGHWAY 401/Highway 34/County Road 2

GEOTECHNICAL SURVEY DATA

DATE OF SURVEY	TYPE OF SURVEY
Soils Boreholes: May/November 2017 Pavement Core Holes: May 2017	Golder Associates Ltd. Soil Boreholes: (Power Auger – PA, Hand Auger - HA) Core Holes: Rotary Drill

NOTES

1. Conditions and pavement depths apply only to the date of the survey.
2. The boundaries between the strata have been established only at core/borehole locations. Between cores/boreholes the boundaries are assumed and may be subject to error.
3. Soils are described according to the MTO Soils Classification System.
4. Pavement borehole and core locations were established using experience and judgement.
5. Dimensions are in meters and/or millimetres unless otherwise shown. Stations are in kilometres and meters.
6. Abbreviations for boring and test data conform to OPSD 100.06.

G.W.P. 4013 - 11 - 01	CONTRACT	HWY 34/County Rd 2 Bridge Replacement Site #31-232

ASPHALT CORE DATA

Highway No.:	Highway 34/County Road 2 Underpass, Site 31-232	**Sheet:**	**Page 1 of 3**
Work Project No.	4013-11-01 Highway 410 Mega 3 Eastern Region	**Date:**	May 3 2017
Location:	Lancaster, Ontario	**Job No.**	1211210193
Party Chief : Steven Krieger			

STATION	OFFSET (m)	LOCATION		CORE LOG		COMMENT
	Referenced to C/L	SBL	NBL	Core Log (mm)	Total Thickness (mm)	
9+720	7.2 Rt	x		0-45 SP12.5 FC1 45-75 SP 19.0 75-110 HL4 110-155 HL4 155+ Gravel	155	
9+750	16.0 Rt			0-70 HL4 70+ Gravel	70	Core on Island
9+768	44.0 Rt			0-50 SP 12.5 FC1 50-85 SP 19.0 85-130 SP 19.0 130-160 HL1 Trap 160-195 HL4 195-240 HL4 240+ Gravel	240	Westbound On- ramp
9+768	63.0 Lt			0-50: SP SP 12.5 FC1 50-105 SP 19.0 105-140 HL4 140-180 HL4 180+ Gravel	180	Sideroad - WBL
9+771	28.0 Rt			0-65 SP 12.5 65+ Gravel	65	Core in bullnose
9+774	43.0 Rt			0-60 SP 12.5 FC1 60-95 SP 19.0 65-145 HL1 Trap 145-185 HL4 185-230 HL4 230+ Gravel	230	Eastbound Off-Ramp
9+774	63.0 Lt			0-50 SP 12.5 FC1 50-110 SP 19.0 110-165 HL4 165-220 HL4 220-260 HL4 260+ Gravel	260	Sideroad - EBL
9+790	9.4 Rt	x		0-65 SP 12.5 65+ Gravel	65	Paved Blvd: Back of Curb

ASPHALT CORE DATA

Highway No.:	Highway 34/County Road 2 Underpass, Site 31-232	**Sheet:**	**Page 2 of 3**
Work Project No.	4013-11-01 Highway 410 Mega 3 Eastern Region	**Date:**	May 3 2017
Location:	Lancaster, Ontario	**Job No.**	1211210193
Party Chief : Steven Krieger			

STATION	OFFSET (m)	LOCATION		CORE LOG		COMMENT
	Referenced to C/L	SBL	NBL	Core Log (mm)	Total Thickness (mm)	
9+850	4.0 Rt	x		0-40 SP 12.5 FC1 40-80 HL4 80-125 HL4 125+ Gravel	125	Paved Shoulder
9+937	2.3 Rt	x		0-40 SP 12.5 FC1 40-70 SP 19.0 70-120 HL4 120-200 HL4 200-230 HL2 230+ Gravel	230	
9+957	2.3 Rt	x		0-50 SP 12.5 50-95 HL4 95-145 HL4 145-180 HL4 180-220 HL3 220-295 HL4 295+ Gravel	295	
9+966	2.3 Rt	x		0-40: SP 12.5 FC1 40-95 SP 19.0 95+ Concrete	95	End of Concrete Slab 6m from expansion joint
10+035	2.3 Rt	x		0-50 SP 12.5 FC1 50-110 SP 19.0 110+ Concrete	110	End of Concrete Slab 6m from expansion joint
10+045	2.3 Rt	x		0-45 SP 12.5 FC1 45-70 SP 19.0 70-120 HL4 120-160 HL4 160-210 HL4 210-265 HL4 265+ Gravel	265	
10+065	2.4 Rt	x		0-45 SP 12.5 FC1 45-75 SP 19.0 75-130 HL4 130-170 HL4 170-230 HL4 230+ Gravel	230	
10+150	5.3 Rt	x		0-45 SP 12.5 FC1 45-80 SP 19.0 80-105 HL4 105-170 HL4 170+ Gravel	170	
10+150	8.3 Rt	x		0-50 SP 12.5 FC1 50-120 HL4 120+ Gravel	120	Paved Shoulder
10+225	40.0 Lt			0-40 SP 12.5 40-80 SP 12.5 80+ Gravel	80	Sideroad-WBL
10+228	39.0 Rt			0-40 SP 12.5 FC1 40-90 SP 19.0 90-125 HL1 Trap 125-160 HL4 160-220 HL4 220+ Gravel	220	Eastbound On-Ramp
10+232	39.0 Rt			0-70 SP 12.5 70+ Gravel	70	Core in Bullnose
10+235	39.0 Rt			0-70 SP 12.5 FC1 70-135 SP 19.0 135+ Gravel	135	Westbound Off-Ramp
10+275	2.3 Rt	x		0-40 SP 12.5 FC1 40-90 HL3 90-165 HL4 165+ Gravel	165	

GOLDER PROJECT NO. 1211210193
CREATED BY: NR
Drawing file: S:\Clients\MTO\Hwy_34\99_PROJ\1211210193_County_Road2\40_PROD\0001_Soil_Data_Sheet\1211210193-0001-BG-0001.dwg Dec 11, 2017 - 3:37pm
MODIFIED:

METRIC

PLATE No.	
CONT.	2018-4008
G.W.P. No.	4013-11-00

SOIL DATA	SHEET 141
Golder Associates	PREPARED: DECEMBER 2017
	REVISED:

HIGHWAY 401/Highway 34/County Road 2

Hwy 401/CR 2/Hwy 34 - Bridge Site 31-232 (W.P. 4013-11-01)
Township of South Glengarry

County Road 2/Highway 34

Station 9+768 to 10+425, Referenced to C/L

9+768 44.00 Lt C/L D-0 PA

0 - 170 Asph
170 - 720 Br Cr Gran
720 - 1.00 Br F-Med Sa W Si Tr Gr, moist
1.00 - 1.50 Br Si Cl Tr Sa Tr Gr Tr Org M, Moist, Firm

9+768 28.00 Rt C/L D-0 PA

0 - 230 Asph
230 - 550 Br Cr Gran, Fr Wat @ 500
550 - 1.50 Br Si Sa Tr Cl Tr Gr, moist*

9+774 44.00 Lt C/L D-0 PA

0 - 220 Asph
220 - 670 Br Cr Gran
670 - 1.50 Br Si Cl Tr Sa Tr Gr Tr Org M, Moist, Firm

9+774 28.00 Rt C/L D-0 PA

0 - 110 Asph
110 - 800 Br Cr Gran*
800 - 1.50 Br Si Sa Tr Cl Tr Gr, moist
* Sample Depth = 200 - 500
Passing 26.5 mm = 100 %
19.0 mm = 96 %
13.2 mm = 91 %
9.5 mm = 82 %
4.75 mm = 66 %
1.18 mm = 46 %
300 um = 29 %
75 um = 17 %
Unacceptable Granular A (Fine and Dirty)

9+825 15.00 Rt C/L D-1.70 HA

0 - 100 Br Sa Tps
100 - 850 Br Cr Gran W Sa
850 - 1.20 Br Si Sa W Gr

9+825 25.00 Rt C/L D-2.20 HA

0 - 075 Br Fib-F Org, Sat, Soft
075 - 1.50 Br Si Cl, moist, firm*
* Sample Depth = 075 - 1.50
Passing 4.75 mm = 100 %
2.00 mm = 100 %
425 um = 100 %
75 um = 99 %
5 um = 76 %
2 um = 65 %
w = 43 %
WL = 70 % WP = 23 % IP = 47 %
Classification = CH
Frost Susc. = LSFH
'K' Factor = 0.24

9+825 2.30 Rt C/L D-0 PA

0 - 100 Asph
100 - 1.10 Br Cr Gran
1.10 - 1.50 Br Si Cl Tr Sa Tr Gr, Moist, Firm

9+825 4.70 Rt C/L D-0 PA

0 - 100 Asph
100 - 1.20 Br Cr Gran
1.20 - 1.50 Br Si Cl Tr Sa Tr Gr, Moist, Firm

9+875 25.00 Rt C/L D-2.00 HA

0 - 075 Br Sa Tps
075 - 350 Br Sa(y) Gr Tr Si
350 - 900 Br Si Sa W Cl, Moist, Comp
900 - 2.00 Br Si Cl, Moist, Firm

9+875 2.20 Rt C/L D-0 PA

0 - 140 Asph
140 - 850 Br Cr Gran*
850 - 1.50 Br F-Med Sa W Si W Gr, Moist**
* Sample Depth = 140 - 850
Passing 26.5 mm = 100 %
19.0 mm = 96 %
13.2 mm = 88 %
9.5 mm = 74 %
4.75 mm = 59 %
1.18 mm = 36 %
300 um = 21 %
75 um = 14 %
Unacceptable Granular A (Dirty)
**Sample Depth = 850 - 1.50
Passing 150 mm = 100 %
26.5 mm = 100 %
4.75 mm = 72 %
1.18 mm = 48 %
300 um = 31 %
75 um = 21 %
Unacceptable Granular B, Type I (Dirty)

9+882 15.00 Rt C/L D-2.00 HA

0 - 100 Br Sa Tps
100 - 750 Br Si Sa W Gr
750 - 751 NFP (Blds)

9+925 25.00 Rt C/L D-3.00 HA

0 - 100 Br Sa Tps
100 - 400 Br Sa(y) Gr Tr Si
400 - 600 Br Si Cl Tr Sa, Moist, Firm
600 - 1.20 Br Sa(y) Si Tr Cl
1.20 - 2.00 Br Si Cl, Moist, Firm
2.00 - 2.01 NFP (Stiff)

9+925 15.00 Rt C/L D-2.70 HA

0 - 125 Br Sa Tps
125 - 900 Br Si Sa Tr Gr
900 - 901 NFP (Blds)

9+925 1.90 Rt C/L D-0 PA

0 - 220 Asph
220 - 800 Br Cr Gran
800 - 1.50 Br F-Med Sa W Si W Gr, Moist

10+100 4.40 Rt C/L D-0 PA

0 - 160 Asph
160 - 750 Br Cr Gran
750 - 975 Br F-Med Sa W Si W Gr, moist
975 - 1.50 Br Si Cl Tr Sa, moist, firm*

10+100 18.00 Rt C/L D-3.50 HA

0 - 050 Br Sa Tps
050 - 800 Br Si Sa W Gr
800 - 801 NFP (Blds)

10+100 25.00 Rt C/L D-3.00 HA

0 - 400 Br Cl Si W Sa Tr Org M
400 - 750 Br Si Sa W Cl, Fr Wat @ 400, Moist, Comp
750 - 3.00 Br Si Cl, Moist, Firm*
* Sample Depth = 750 - 3.00
Passing 4.75 mm = 100 %
2.00 mm = 100 %
425 um = 100 %
75 um = 99 %
5 um = 67 %
2 um = 55 %
WL = 70 % WP = 23 % IP = 47 %
Classification = 48.8
Frost Susc. = LSFH
'K' Factor = 0.35

10+135 25.00 Rt C/L D-3.50 HA

0 - 350 Br Sa Tps
350 - 650 Br Si Sa W Cl, Moist, Comp
650 - 2.00 Br Si Cl W Sa, Moist, Firm

10+135 5.10 Rt C/L D-0 PA

0 - 140 Asph
140 - 710 Br Cr Gran*
710 - 1.50 Br Si Cl Tr Sa, moist, firm**
* Sample Depth = 140 - 710
Passing 26.5 mm = 100 %
19.0 mm = 94 %
13.2 mm = 77 %
9.5 mm = 64 %
4.75 mm = 53 %
1.18 mm = 32 %
300 um = 19 %
75 um = 12 %
Acceptable Granular A, Borderline (Dirty)

10+135 15.00 Rt C/L D-2.00 HA

0 - 075 Br Sa Tps
075 - 1.50 Gry Cr Gran W Sa

10+180 9.10 Rt C/L D-0 PA

0 - 090 Asph
090 - 720 Br Cr Gran
720 - 1.50 Br Si Cl Tr Sa Tr Gr, moist, firm

10+180 5.50 Rt C/L D-0 PA

0 - 160 Asph
160 - 710 Br Cr Gran
710 - 1.50 Br Si Cl Tr Sa Tr Gr, moist, firm

10+180 25.00 Rt C/L D-2.50 HA

0 - 350 Br Sa Tps
350 - 600 Br Si Sa W Cl W Gr, Moist, Comp
600 - 1.50 Br Si Cl W Sa, Moist, Firm

10+220 28.00 Lt C/L D-500 HA

0 - 200 Br Sa Tps
200 - 800 Br Gr(y) Sa W Si Tr Cl, moist
800 - 801 NFP (Blds)

10+225 26.00 Rt C/L D-500 HA

0 - 350 Br Sa Tps
350 - 700 Br Si Sa Tr Gr, moist
700 - 1.50 Br Si Cl Tr Sa, Moist, Firm

10+230 26.00 Rt C/L D-0 PA

0 - 110 Asph
110 - 900 Br Cr Gran
900 - 1.50 Br Si Sa W Cl Tr Gr, Moist, Comp*
* Sample Depth = 900 - 1.50
Passing 4.75 mm = 96 %
2.00 mm = 90 %
425 um = 47 %
75 um = 61 %
5 um = 23 %
2 um = 18 %
w = 27 %
WL = 34 % WP = 18 % IP = 16 %
Classification = CI
Frost Susc. = LSFH
'K' Factor = 0.34

10+230 28.00 Lt C/L D-0 PA

0 - 200 Asph
200 - 850 Br Cr Gran
850 - 1.50 Br Gr(y) Sa W Si Tr Cl, moist*
* Sample Depth = 850 - 1.50
Passing 4.75 mm = 84 %
2.00 mm = 72 %
425 um = 55 %
75 um = 38 %
5 um = 13 %
2 um = 9 %
Plasticity = Non-plastic
Classification = SM
Frost Susc. = LSFH
'K' Factor = 0.18

10+237 26.00 Rt C/L D-0 PA

0 - 130 Asph
130 - 850 Br Cr Gran*
850 - 1.50 Br Si Sa W Cl Tr Gr, Moist, Comp
* Sample Depth = 130 - 850
Passing 26.5 mm = 100 %
19.0 mm = 92 %
13.2 mm = 82 %
9.5 mm = 73 %
4.75 mm = 55 %
1.18 mm = 33 %
300 um = 20 %
75 um = 12 %
Acceptable Granular A, Borderline (Dirty)

10+240 28.00 Lt C/L D-0 PA

0 - 160 Asph
160 - 875 Br Cr Gran
875 - 1.50 Br Gr(y) Sa W Si Tr Cl, moist

10+325 7.10 Rt C/L D-1.00 HA

0 - 125 Br Cl(y) Tps
125 - 1.20 Br Si(y) Cl, Moist

10+350 5.00 Rt C/L D-0 PA

0 - 170 Asph
170 - 725 Br Cr Gran
725 - 1.50 Br Si(y) Sa W Gr Tr Cl, Moist

10+350 2.30 Rt C/L D-0 PA

0 - 160 Asph
160 - 700 Br Cr Gran
700 - 850 Br Si(y) Sa W Gr Occ Cob Occ Blds, Moist
850 - 850 NFP Boulder

10+350 5.00 Lt C/L D-0 PA

0 - 315 Asph
315 - 725 Br Cr Gran
725 - 1.50 Br Si(y) Sa Tr Cl Tr Gr, Moist

10+425 7.20 Rt C/L D-1.00 HA

0 - 100 Br Cl(y) Tps
100 - 1.20 Br Si(y) Cl, Moist

10+425 2.10 Rt C/L D-0 PA

0 - 310 Asph
310 - 640 Br Cr Gran
640 - 1.25 Gry Br Si W Sa Tr Org M, Moist, Comp*
1.25 - 1.50 Gry Br Sl(y) Cl W Sa, Moist**
* Sample Depth = 640 - 1.25
Passing 4.75 mm = 100 %
2.00 mm = 99 %
425 um = 98 %
75 um = 87 %
5 um = 15 %
2 um = 12 %
w = 33 %
Plasticity = Non-plastic
Classification = ML
Frost Susc. = HSFH
'K' Factor = 0.65
** Sample Depth = 1.25 - 1.50
Passing 4.75 mm = 97 %
2.00 mm = 93 %
425 um = 92 %
75 um = 84 %
5 um = 50 %
2 um = 39 %
w = 24 %
WL = 34 % WP = 16 % IP = 18 %
Classification = CI
Frost Susc. = LSFH
'K' Factor = 0.29

10+425 4.10 Rt C/L D-0 PA

0 - 140 Asph
140 - 550 Br Cr Gran
550 - 1.00 Gry Br Si W Sa, Moist
1.00 - 1.50 Gry Br Si(y) Cl W Sa, Moist

GOLDER PROJECT NO. 1211210193
CREATED BY: NR
Drawing file: S:\Clients\MTO\Hwy_34\99_PROJ\1211210193_County_Road2\40_PROD\0001_Soil_Data_Sheet\1211210193-0001-BG-0001.dwg Dec 11, 2017 - 1:13pm
MODIFIED:

METRIC

PLATE No
CONT No 2018-4008
WP No 4013-11-00

TYPICAL SECTIONS

HIGHWAY 401

SHEET 142

DILLON CONSULTING

LICENSED PROFESSIONAL ENGINEER
M.P. VAN HAREN
100185224
JAN 22/19
PROVINCE OF ONTARIO

SUPPLEMENTAL LEGEND

- ASPHALT PAVEMENT
- CONCRETE BASE
- GRANULAR 'A'
- GRANULAR 'B'
- SELECT SUBGRADE MATERIAL FILL

GENERAL NOTES:

1. P.S. DENOTES PAVED SHOULDER
   S/W DENOTES SIDEWALK
   E.P. DENOTES EDGE OF PAVEMENT
   B.P. DENOTES BREAKPOINT
   SCL DENOTES SPEED CHANGE LANE
   RND DENOTES ROUNDING
2. WHERE STEEL BEAM GUIDE RAIL IS INDICATED, THE ROUNDING SHALL BE 1.0m WITH 0.5m FROM THE EDGE OF SHOULDER TO THE BREAKPOINT.
3. WHERE STEEL BEAM GUIDE RAIL IS INDICATED, THE FORESLOPE SHALL BE 3:1 BEYOND THE BREAKPOINT.
4. ALL AREAS TO BE COVERED BY FILL WIDENING SHALL BE STRIPPED OF TOPSOIL.
5. HEIGHT OF FILL IS THE DIFFERENCE IN ELEVATION BETWEEN ORIGINAL GROUND AT THE TOE OF SLOPE AND THE ROUNDING BREAKPOINT.
6. SEED AND MATRIX ON SLOPES STEEPER THAN 3:1.

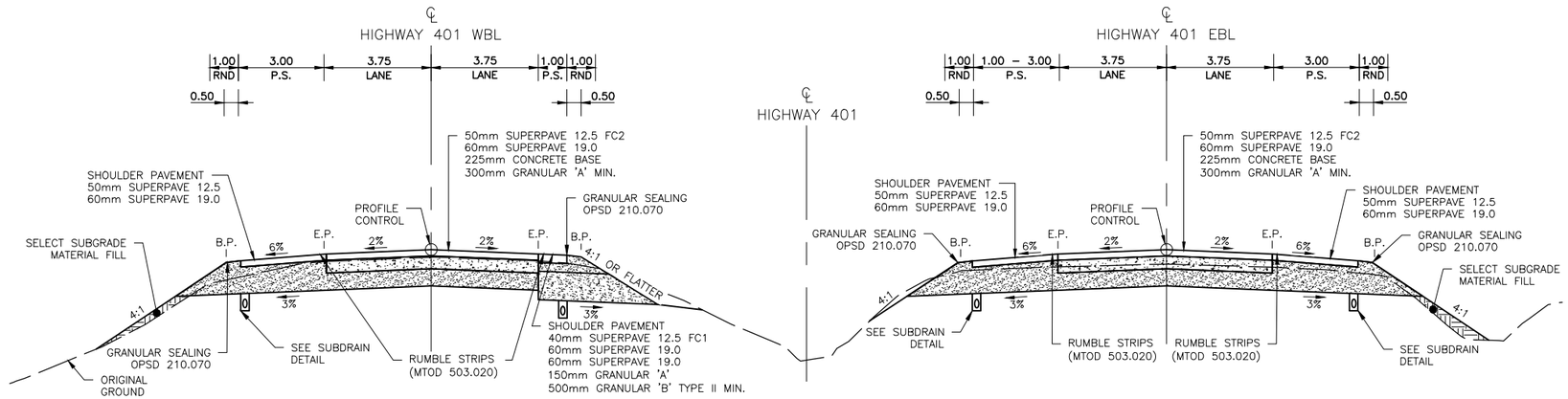

HIGHWAY 401
STA. 26+597.2 TO STA. 26+674.0 WBL
STA. 26+553.8 TO STA. 26+674.0 EBL

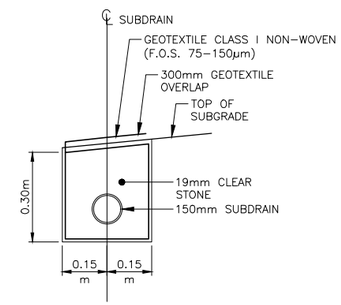

SUBDRAIN DETAIL

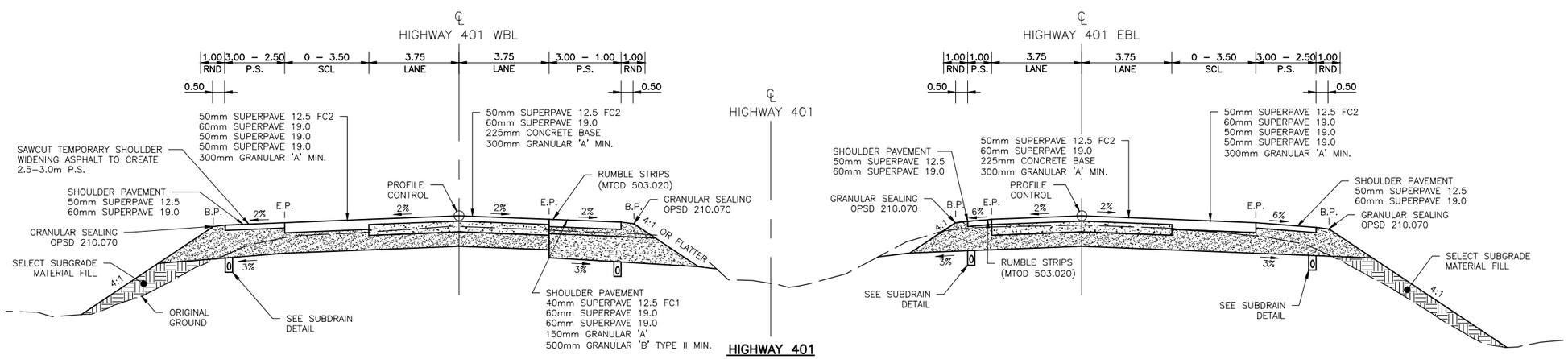

HIGHWAY 401
STA. 26+674.0 TO STA. 26+765.1 WBL
STA. 26+674.0 TO STA. 26+765.1 EBL
STA. 26+848.7 TO STA. 27+021.1 WBL
STA. 26+848.7 TO STA. 27+029.0 EBL

N.T.S.

DATE PLOTTED: 1/16/2019 1:52:15 PM
FILE LOCATION: C:\projectwise\working_directory\active\10mcr\d0517908\4013-Typicals.dwg

SUPPLEMENTAL LEGEND

- ASPHALT PAVEMENT
- GRANULAR 'A'
- GRANULAR 'B'

METRIC

LICENSED PROFESSIONAL ENGINEER
M.P. VAN HAREN
100185224
JAN 22/19
PROVINCE OF ONTARIO

PLATE No CONT No 2018–4008 WP No 4013–11–00	
TYPICAL SECTIONS	SHEET
HIGHWAY 401	143
DILLON CONSULTING	

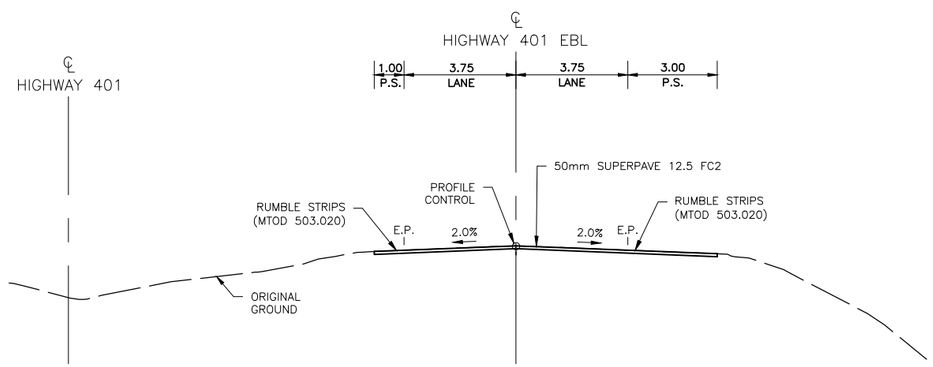

EASTBOUND
STA. 27+029.0 TO STA. 27+044

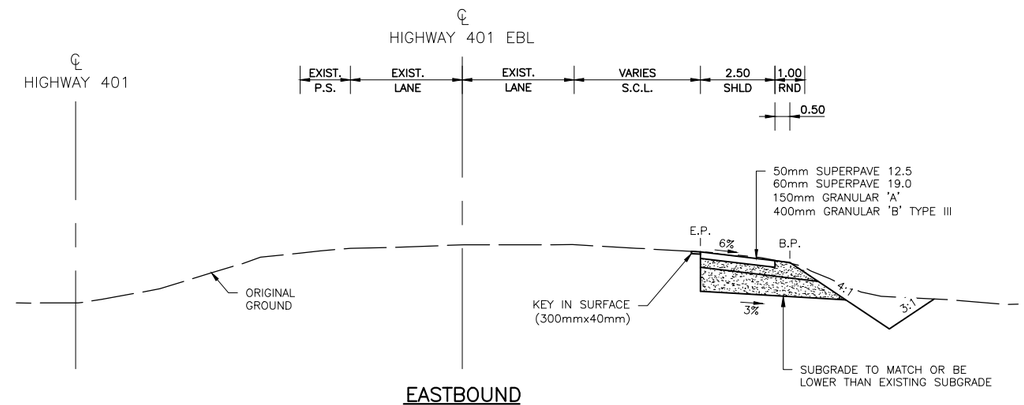

EASTBOUND
STA. 27+551 TO STA. 10+041

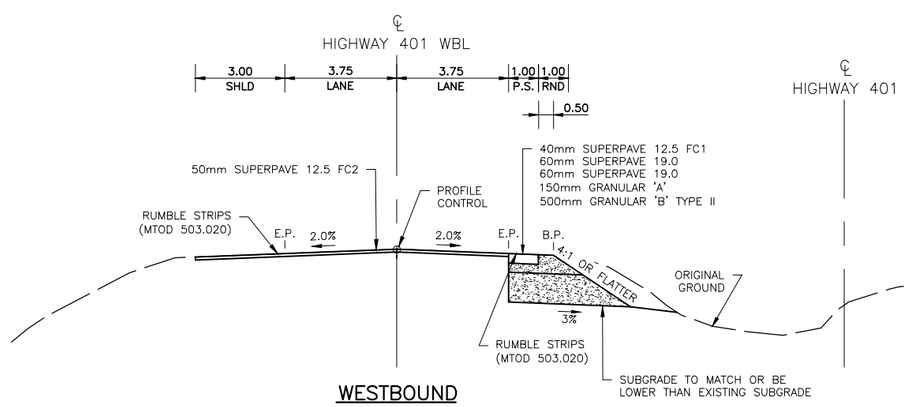

WESTBOUND
STA. 26+582 TO STA. 26+597.2

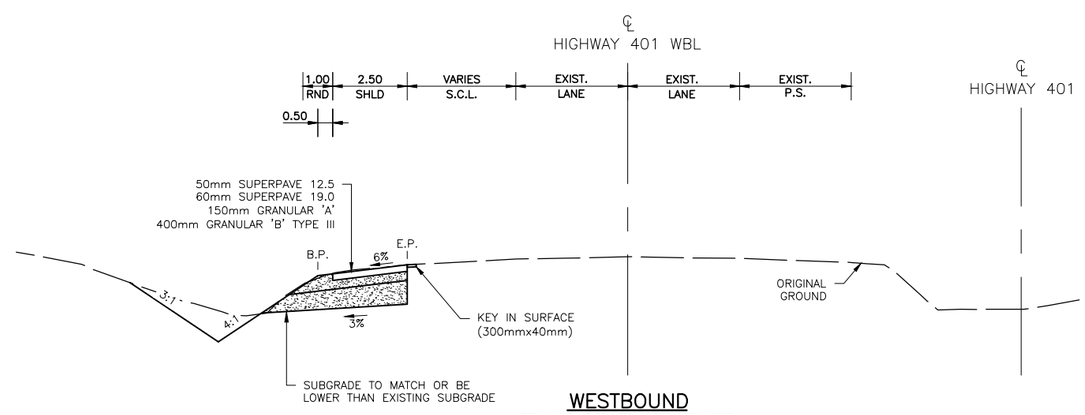

WESTBOUND
STA. 27+554 TO STA. 10+090

N.T.S.

DATE PLOTTED: 1/16/2019 1:52:17 PM
FILE LOCATION: C:\projectwise\working_directory\active\10mcr\d0517908\4013-Typicals.dwg

SUPPLEMENTAL LEGEND

- ASPHALT PAVEMENT
- CONCRETE PAVEMENT OR CONCRETE BASE
- GRANULAR 'A'
- GRANULAR 'B'

METRIC

LICENSED PROFESSIONAL ENGINEER
M.P. VAN HAREN
100185224
Jan 22/19
PROVINCE OF ONTARIO

PLATE No
CONT No 2018–4008
WP No 4013–11–00

TYPICAL SECTIONS

HIGHWAY 401

SHEET
144

DILLON CONSULTING

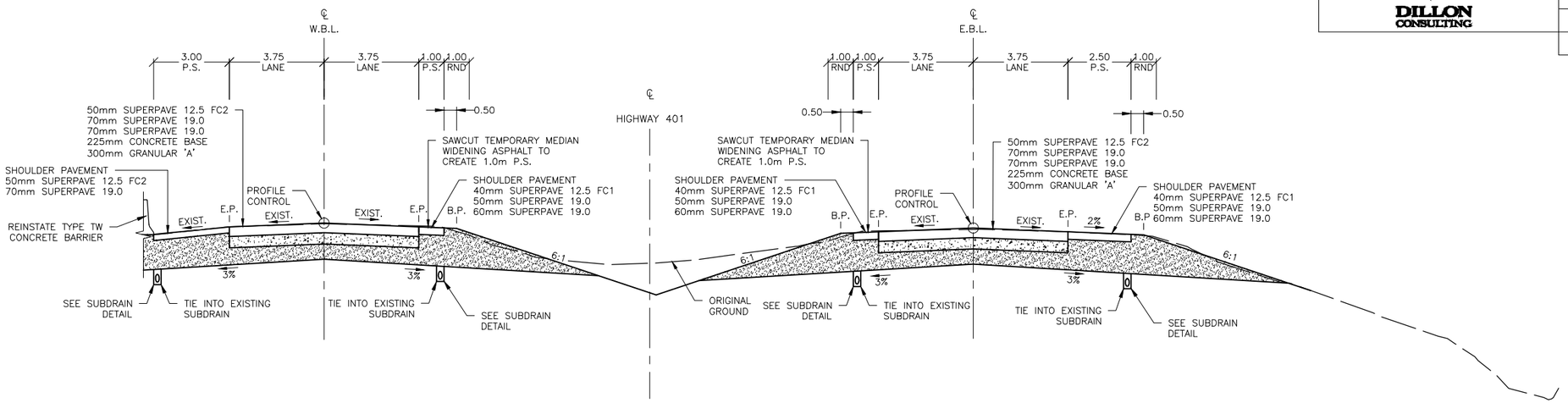

HIGHWAY 401
STA. 11+236 TO STA. 11+268 W.B.L
STA. 11+224 TO STA. 11+256 E.B.L

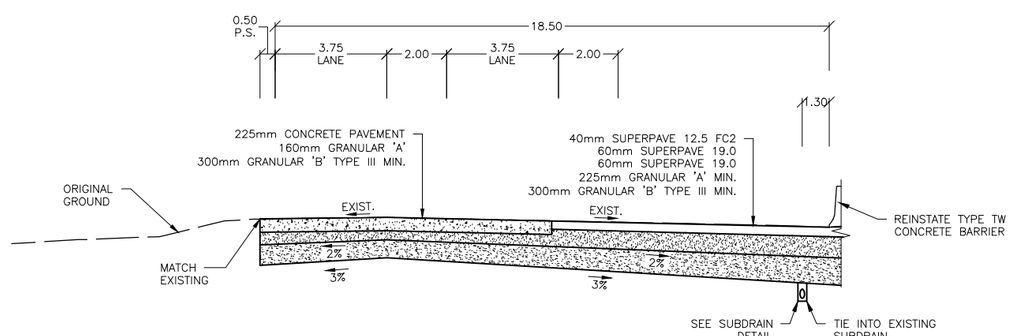

TRUCK INSPECTION STATION
STA. 11+240 TO STA. 11+275

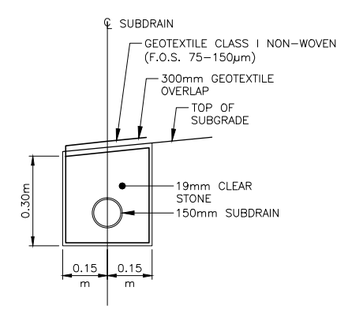

SUBDRAIN DETAIL

N.T.S.

DATE PLOTTED: 1/17/2019 3:04:16 PM
FILE LOCATION: C:\projectwise\working directory\active\10mcr\d0584061\4013-Typicals.dwg

METRIC

PLATE No
CONT No 2018–4008
WP No 4013–11–00

TYPICAL SECTIONS

COUNTY ROAD 2/34

SHEET 145

DILLON CONSULTING

LICENSED PROFESSIONAL ENGINEER
M.P. VAN HAREN
100185224
JAN 22/19
PROVINCE OF ONTARIO

SUPPLEMENTAL LEGEND

- ASPHALT PAVEMENT
- GRANULAR 'A'
- GRANULAR 'B' TYPE III

SHOULDER CROSSFALL VARIES WITH RATE OF SUPERELEVATION (%)

SUPERELEVATION RATE SHOULDER CROSSFALL TO BE SHOWN IN THE TABLE													
Pav't.	+6	+5	+4	+3	+2	+1	0	−1	−2	−3	−4	−5	−6
Shld.	−2	−2	−2	−3	−3	−3	−4	−5	−6	−6	−6	−6	−6

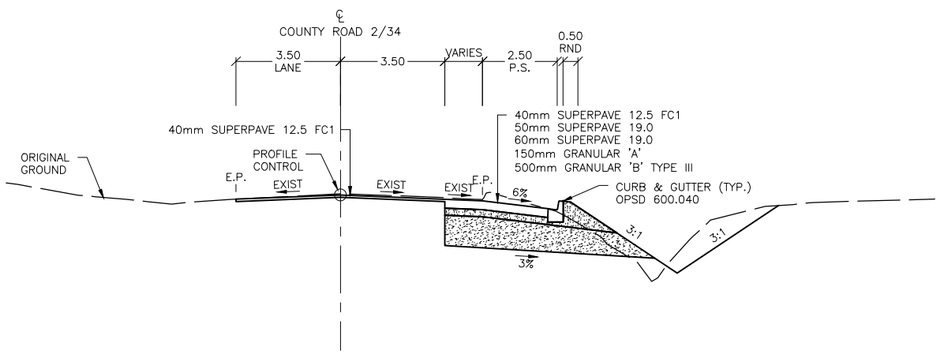

COUNTY ROAD 2/34
STA. 9+578 TO STA. 9+598

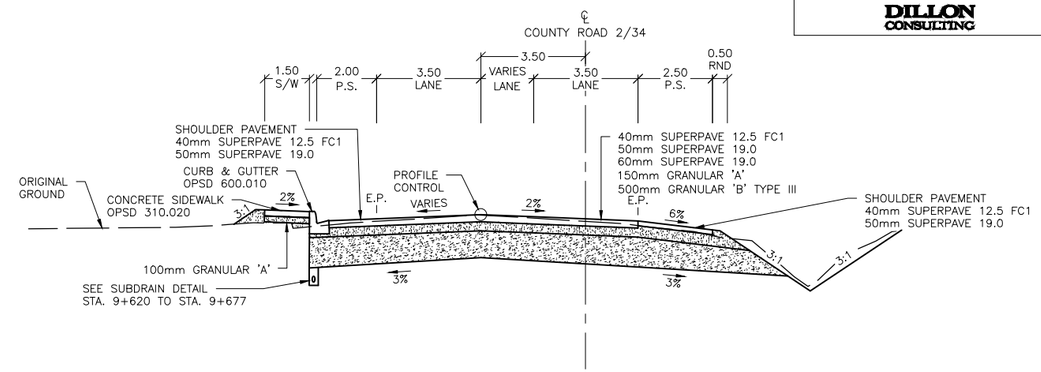

COUNTY ROAD 2/34
STA. 9+617 TO STA. 9+645

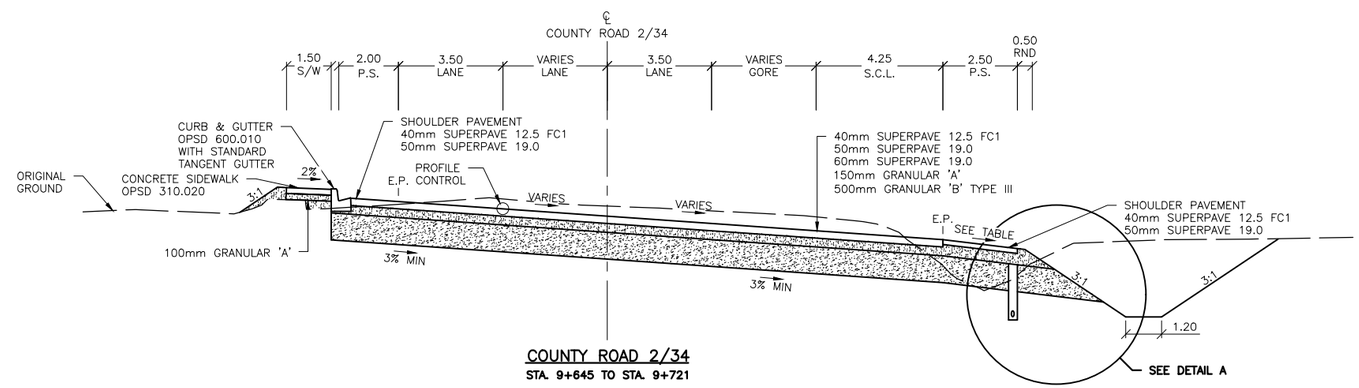

COUNTY ROAD 2/34
STA. 9+645 TO STA. 9+721

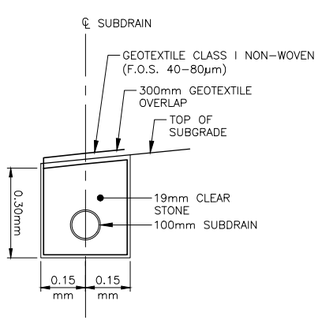

SUBDRAIN DETAIL

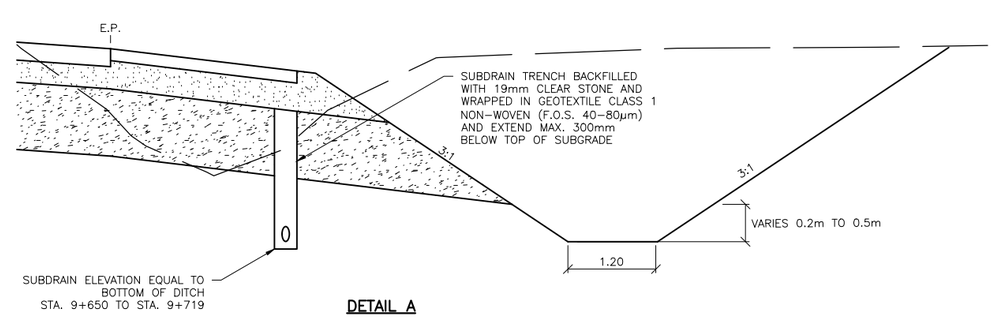

DETAIL A

N.T.S.

DATE PLOTTED: 1/16/2019 1:52:29 PM
FILE LOCATION: C:\projectwise\working directory\active\10mcr\d0517910\4013-Typicals.dwg

METRIC

PLATE No

CONT No 2018–4008
WP No 4013–11–00

TYPICAL SECTIONS

COUNTY ROAD 2/34

SHEET 146

DILLON CONSULTING

LICENSED PROFESSIONAL ENGINEER
M.P. VAN HAREN
100185224
JAN 22/19
PROVINCE OF ONTARIO

SUPPLEMENTAL LEGEND

- ASPHALT PAVEMENT
- GRANULAR 'A'
- GRANULAR 'B' TYPE III
- SELECT SUBGRADE MATERIAL

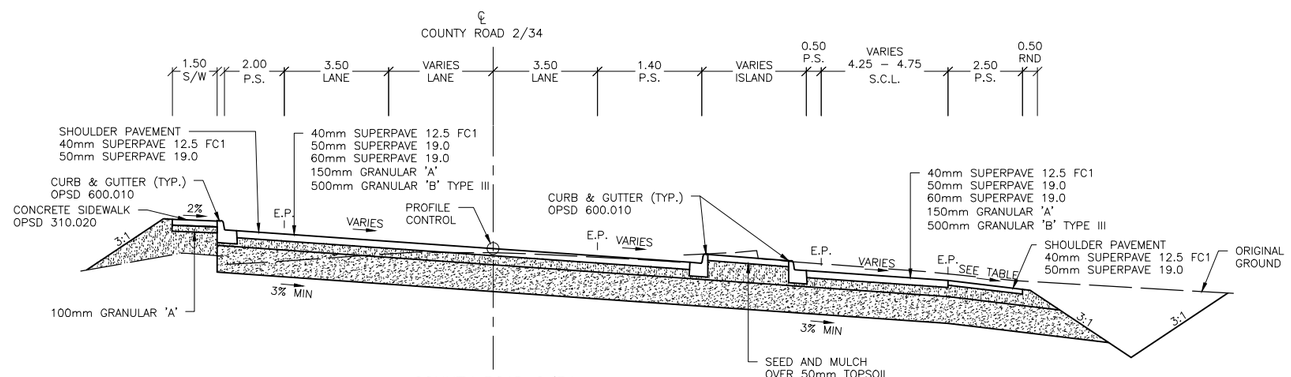

COUNTY ROAD 2/34
STA. 9+721 TO STA. 9+813

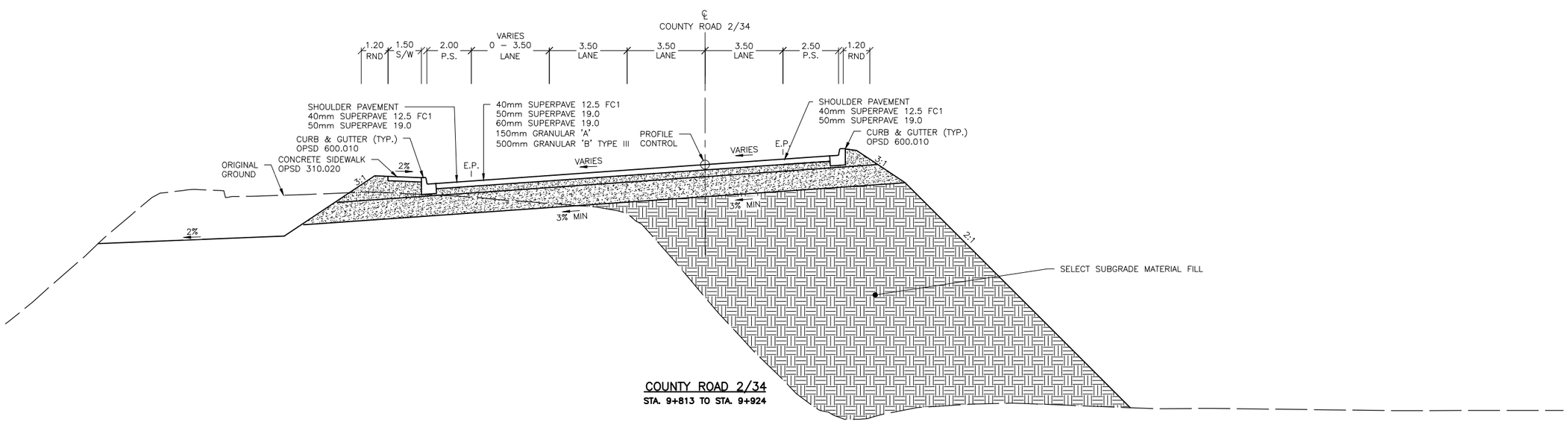

COUNTY ROAD 2/34
STA. 9+813 TO STA. 9+924

N.T.S.

DATE PLOTTED: 1/16/2019 1:52:32 PM
FILE LOCATION: C:\projectwise\working_directory\active\10mcr\d0517910\4013-Typicals.dwg

METRIC

PLATE No

CONT No 2018-4008
WP No 4013-11-00

TYPICAL SECTIONS

COUNTY ROAD 2/34

SHEET 147

DILLON CONSULTING

LICENSED PROFESSIONAL ENGINEER
M.P. VAN HAREN
100185224
JAN 22/19
PROVINCE OF ONTARIO

SUPPLEMENTAL LEGEND

- ASPHALT PAVEMENT
- GRANULAR 'A'
- GRANULAR 'B' TYPE III
- SELECT SUBGRADE MATERIAL

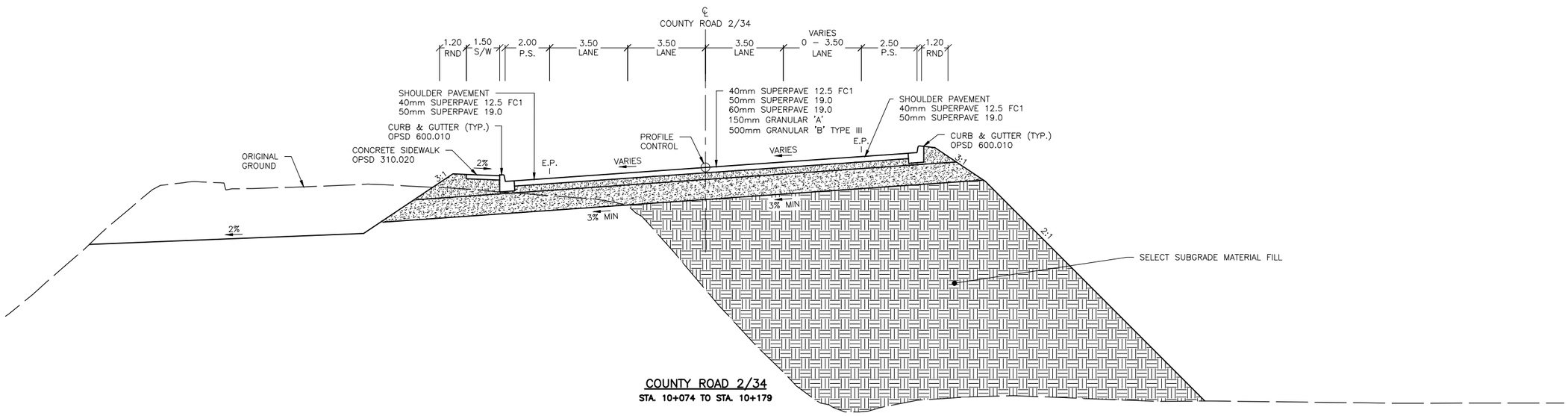

COUNTY ROAD 2/34
STA. 10+074 TO STA. 10+179

N.T.S.

DATE PLOTTED: 1/16/2019 1:52:37 PM
FILE LOCATION: C:\projectwise\working directory\active\10mcr\d0517910\4013-Typicals.dwg

METRIC

PLATE No

CONT No 2018-4008
WP No 4013-11-00

TYPICAL SECTIONS

COUNTY ROAD 2/34

SHEET 148

DILLON CONSULTING

LICENSED PROFESSIONAL ENGINEER
M.P. VAN HAREN
100185224
JAN 22/19
PROVINCE OF ONTARIO

SUPPLEMENTAL LEGEND

- ASPHALT PAVEMENT
- GRANULAR 'A'
- GRANULAR 'B' TYPE III

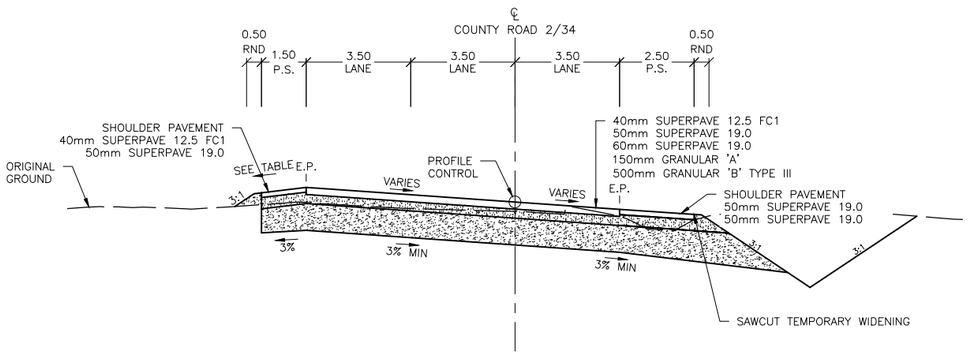

COUNTY ROAD 2/34
STA. 10+268 TO STA. 10+327

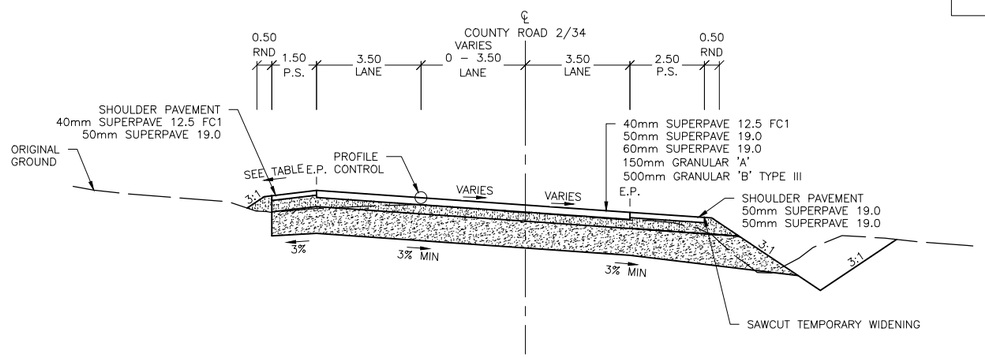

COUNTY ROAD 2/34
STA. 10+327 TO STA. 10+370

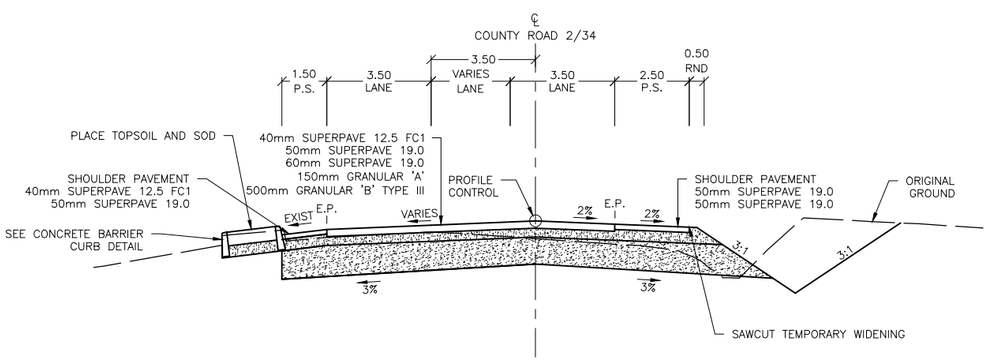

COUNTY ROAD 2/34
STA. 10+370 TO STA. 10+398

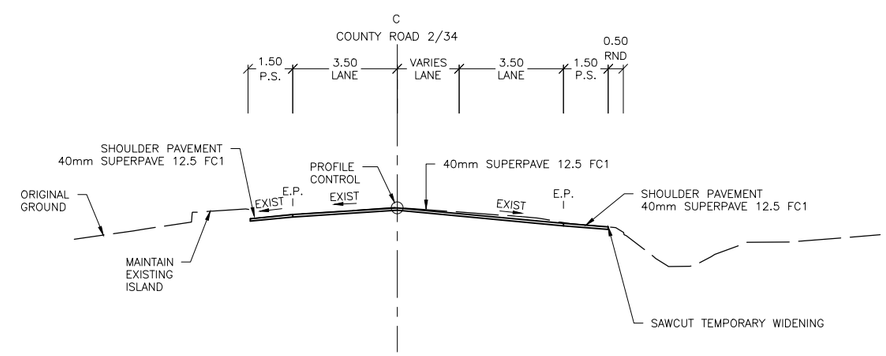

COUNTY ROAD 2/34
STA. 10+398 TO STA. 10+457

N.T.S.

DATE PLOTTED: 1/16/2019 1:52:42 PM
FILE LOCATION: C:\projectwise\working_directory\active\10mcr\d0517910\4013-Typicals.dwg

METRIC

PLATE No

CONT No 2018-4008
WP No 4013-11-00

TYPICAL SECTIONS

COUNTY ROAD 2/34

SHEET 149

DILLON CONSULTING

LICENSED PROFESSIONAL ENGINEER
M.P. VAN HAREN
100185224
JAN 22/19
PROVINCE OF ONTARIO

SUPPLEMENTAL LEGEND

- ASPHALT PAVEMENT
- GRANULAR 'A'
- GRANULAR 'B' TYPE III

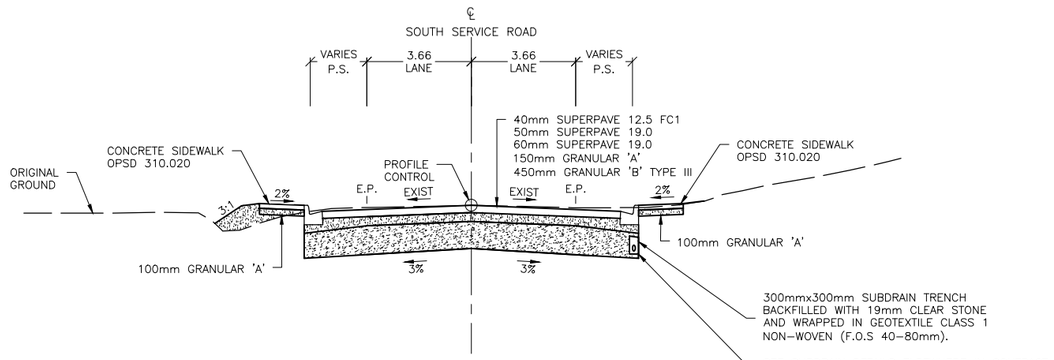

SOUTH SERVICE ROAD
STA. 10+000 TO STA. 10+058

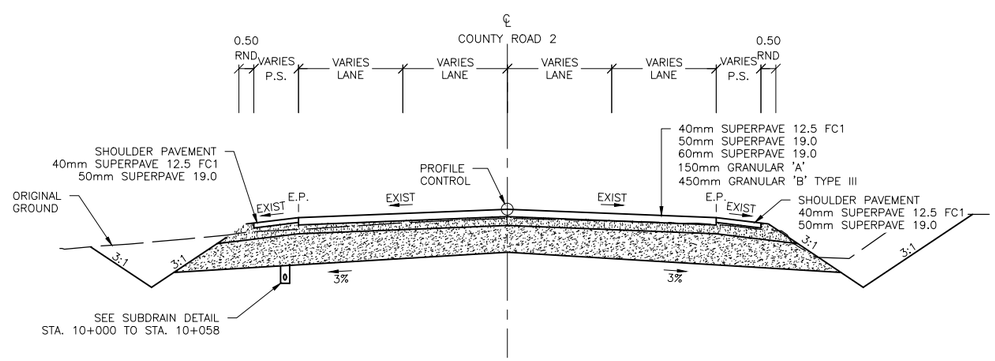

COUNTY ROAD 2
STA. 10+000 TO STA. 10+065

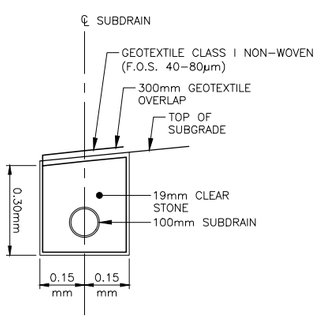

N.T.S.

DATE PLOTTED: 1/16/2019 1:52:47 PM
FILE LOCATION: C:\projectwise\working_directory\active\10mcr\d0517910\4013-Typicals.dwg

METRIC

PLATE No

CONT No 2018-4008
WP No 4013-11-00

TYPICAL SECTIONS

COUNTY ROAD 2/34

SHEET 150

DILLON CONSULTING

LICENSED PROFESSIONAL ENGINEER
M.P. VAN HAREN
100185224
JAN 22/19
PROVINCE OF ONTARIO

SUPPLEMENTAL LEGEND

- ASPHALT PAVEMENT
- GRANULAR 'A'
- GRANULAR 'B' TYPE III

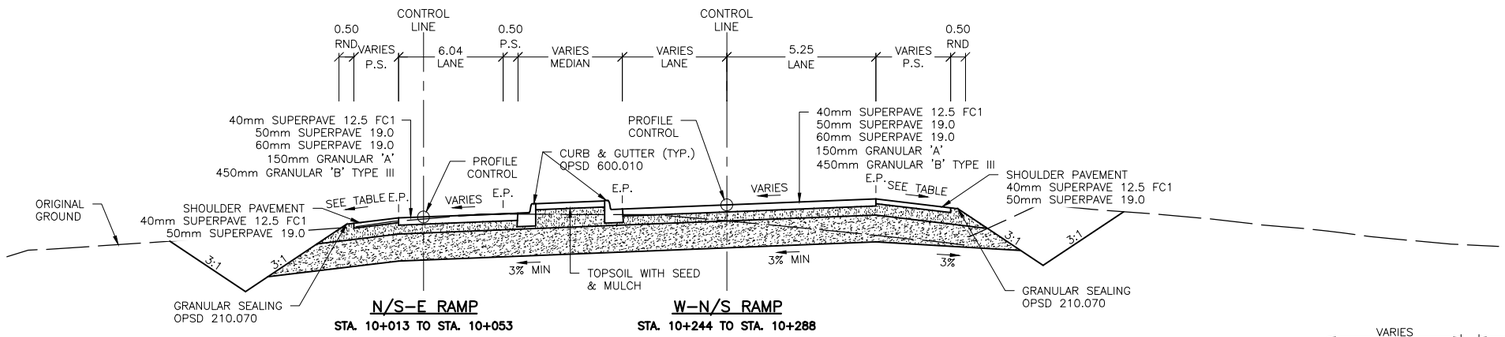

N/S-E RAMP
STA. 10+013 TO STA. 10+053

W-N/S RAMP
STA. 10+244 TO STA. 10+288

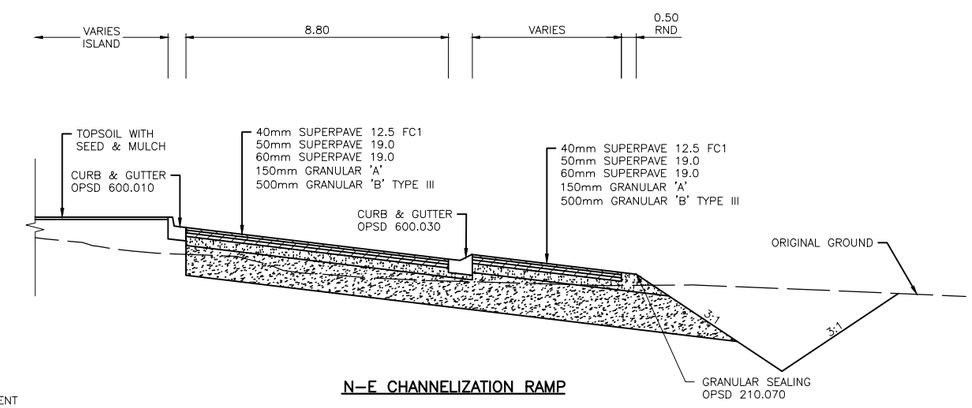

N-E CHANNELIZATION RAMP

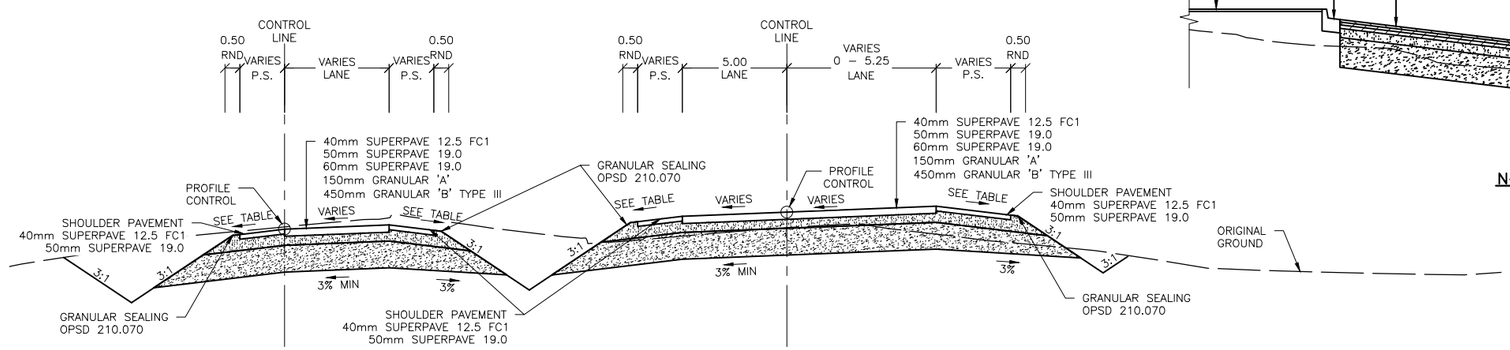

N/S-E RAMP
STA. 10+053 TO STA. 10+101

W-N/S RAMP
STA. 10+244 TO STA. 10+168

N.T.S.

DATE PLOTTED: 1/21/2019 5:29:40 PM
FILE LOCATION: C:\projectwise\working_directory\active\10mcr\d0517910\4013-Typicals.dwg

METRIC

PLATE No

CONT No 2018–4008
WP No 4013–11–00

TYPICAL SECTIONS

COUNTY ROAD 2/34

SHEET 151

DILLON CONSULTING

LICENSED PROFESSIONAL ENGINEER
M.P. VAN HAREN
100185224
Jan 22/19
PROVINCE OF ONTARIO

SUPPLEMENTAL LEGEND

- ASPHALT PAVEMENT
- GRANULAR 'A'
- GRANULAR 'B' TYPE III

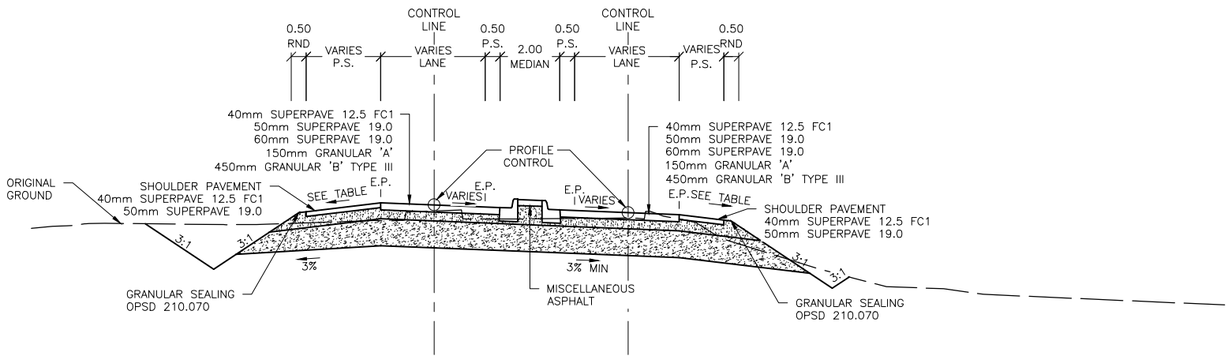

N/S–W RAMP
STA. 10+022 TO STA. 10+031

E–N/S RAMP
STA. 10+290 TO STA. 10+284

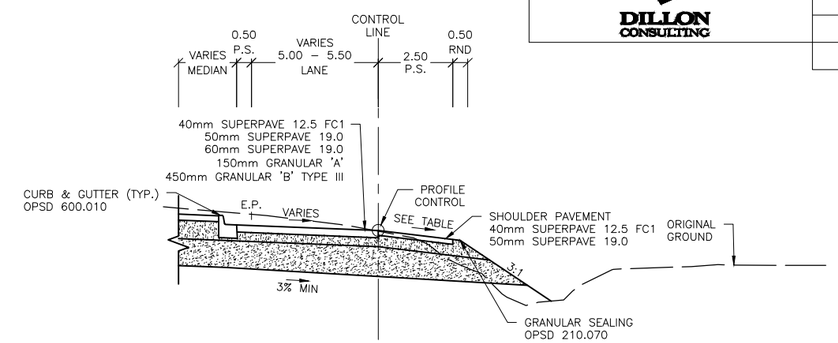

N–W CHANNELIZATION RAMP

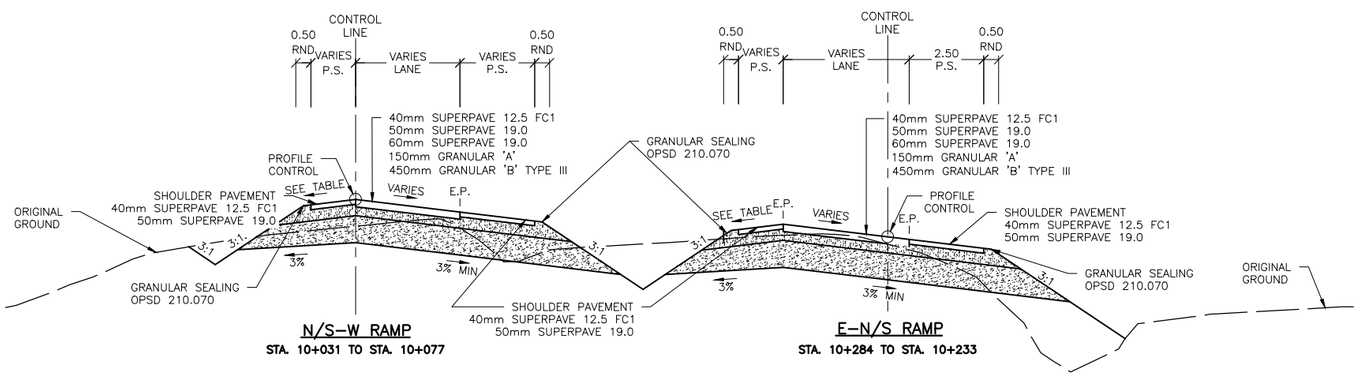

N/S–W RAMP
STA. 10+031 TO STA. 10+077

E–N/S RAMP
STA. 10+284 TO STA. 10+233

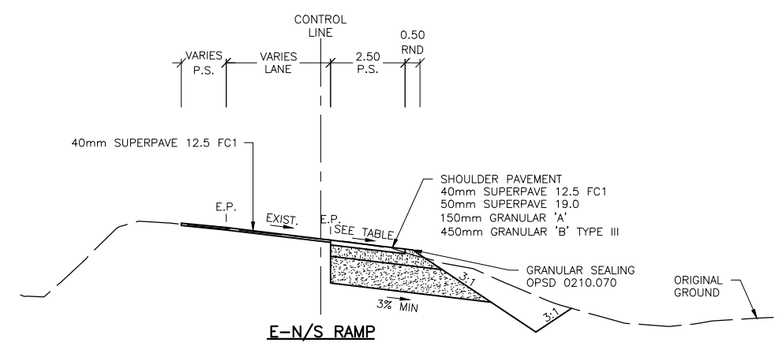

E–N/S RAMP
STA. 10+233 TO STA. 10+192

N.T.S.

DATE PLOTTED: 1/21/2019 5:33:05 PM
FILE LOCATION: C:\projectwise\working_directory\active\10mcr\d0517910\4013-Typicals.dwg

METRIC

PLATE No	
CONT No 2018–4008	
WP No 4013–11–00	
MISCELLANEOUS DETAILS	SHEET 152
HIGHWAY 401 SURFACE COURSE PAVING	
DILLON CONSULTING	

GENERAL NOTES:

1. USE GRADED MATERIAL TO CREATE 1m ROUNDING.
2. THE WORK DETAILED ON THIS SHEET SHALL BE COMPLETED IN YEAR 1 OF THE CONTRACT.

LICENSED PROFESSIONAL ENGINEER
M.P. VAN HAREN
100185224
Jan 22/19
PROVINCE OF ONTARIO

HWY 401 – PAVING TANGENT SECTIONS

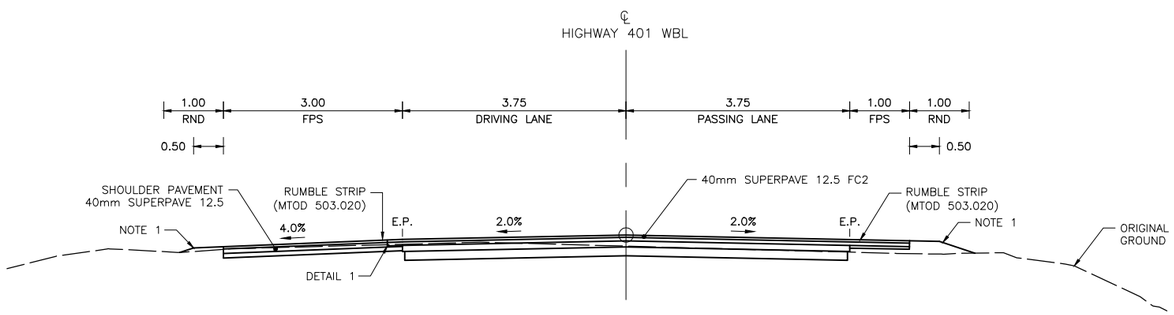

WESTBOUND
STA. 23+739 TO STA. 26+617

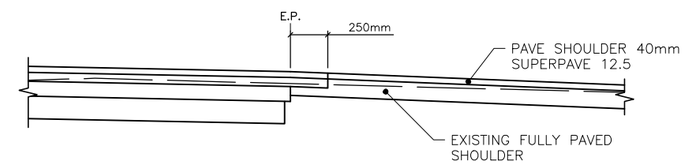

DETAIL 1

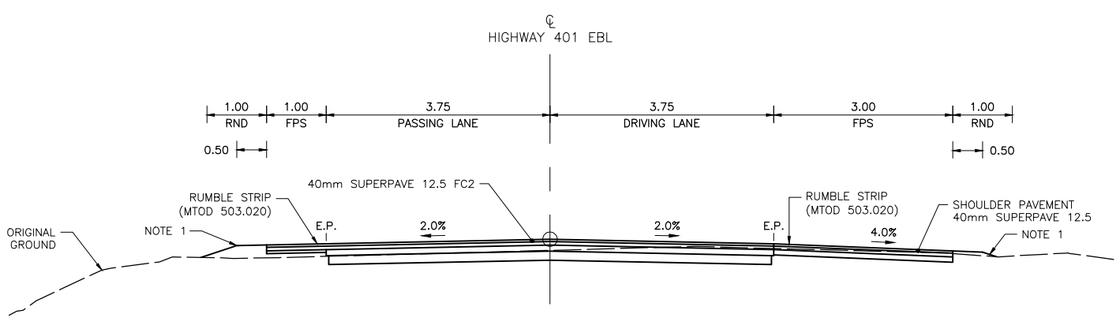

EASTBOUND
STA. 23+723 TO STA. 26+574

N.T.S.

DATE PLOTTED: 1/21/2019 5:35:02 PM
FILE LOCATION: C:\projectwise\working_directory\active\10mcr\d0517908\4013-11-00_Miscellaneous_Details.dwg

SUPPLEMENTAL LEGEND

- ASPHALT PAVEMENT
- GRANULAR 'A'
- GRANULAR 'B' TYPE III
- CONCRETE

METRIC

NOTES:

1. SEE STRUCTURAL DRAWINGS FOR DETAILS OF STRUCTURAL COMPONENTS.
2. SEE OPSD 555.020 FOR COMPOSITE PAVEMENT APPROACH TREATMENT TO STRUCTURE APPROACHES.

LICENSED PROFESSIONAL ENGINEER
M.P. VAN HAREN
100185224
Jan 22/19
PROVINCE OF ONTARIO

PLATE No
CONT No 2018–4008
WP No 4013–11–00

MISCELLANEOUS DETAILS

SHEET 153

HIGHWAY 401
PAVEMENT TRANSITIONS

DILLON CONSULTING

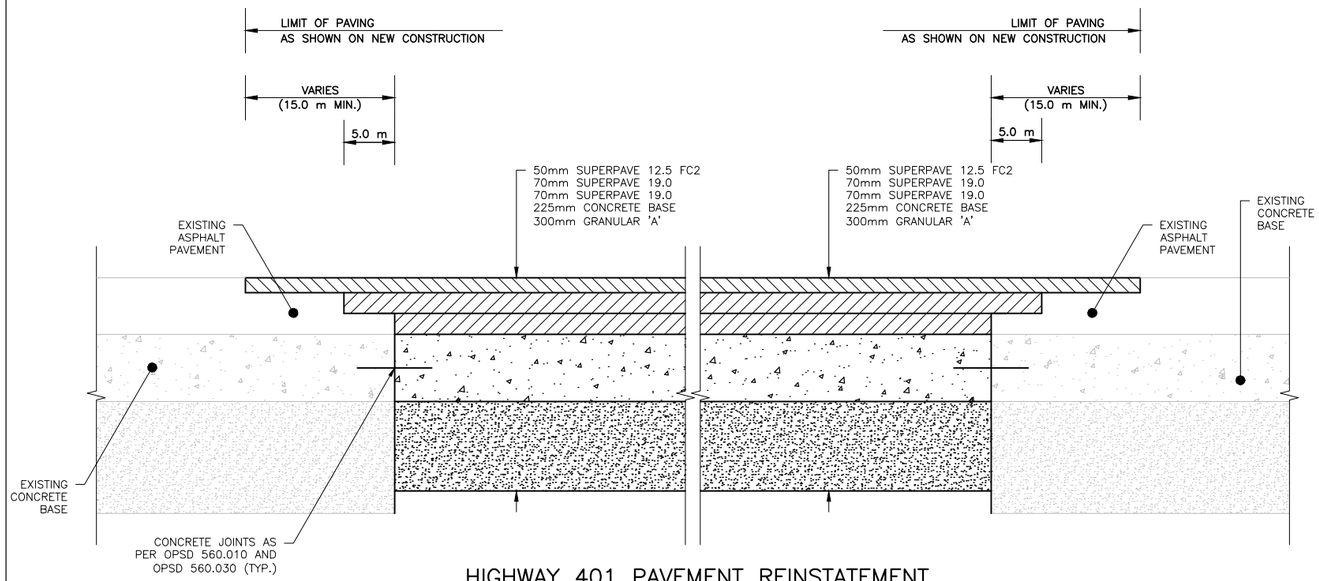

HIGHWAY 401 PAVEMENT REINSTATEMENT
DETAIL AT FINNEY CREEK CULVERT

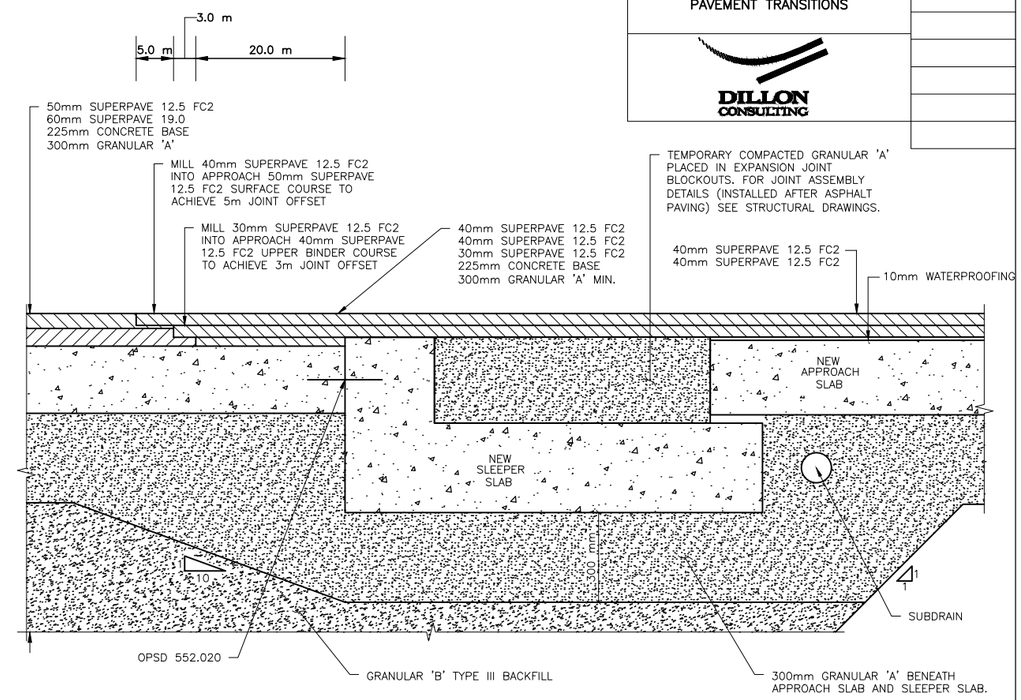

PAVEMENT TRANSITION DETAIL AT APPROACHES TO
RAISIN RIVER BRIDGES

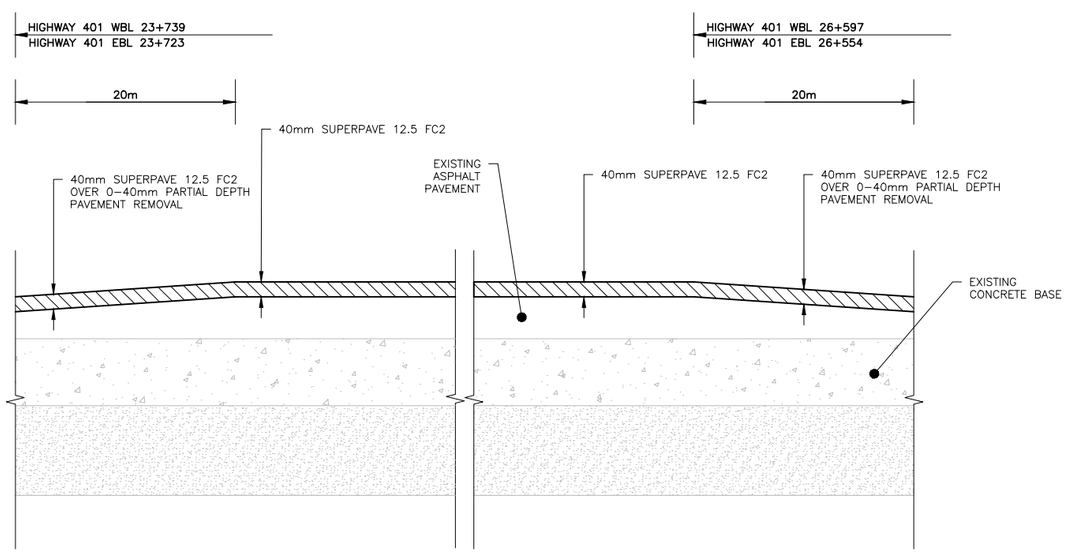

HIGHWAY 401 SURFACE COURSE PAVING
TRANSITION DETAIL

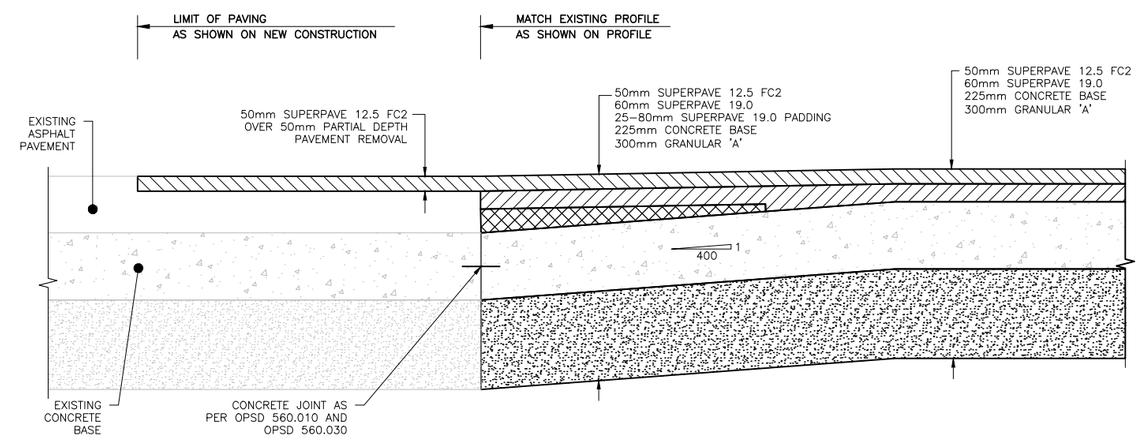

PAVEMENT TRANSITION DETAIL AT
EXISTING HIGHWAY 401 COMPOSITE PAVEMENT

N.T.S.

DATE PLOTTED: 1/16/2019 1:53:22 PM
FILE LOCATION: C:\projectwise\working directory\active\10mcr\d0517908\4013-11-00 Miscellaneous Details.dwg

METRIC

PLATE No
CONT No 2018-4008
WP No 4013-11-00

MISCELLANEOUS DETAILS

SHEET 154

COUNTY ROAD 2/34
PAVEMENT TRANSITIONS

DILLON CONSULTING

LICENSED PROFESSIONAL ENGINEER
M.P. VAN HAREN
100185224
Jan 22/19
PROVINCE OF ONTARIO

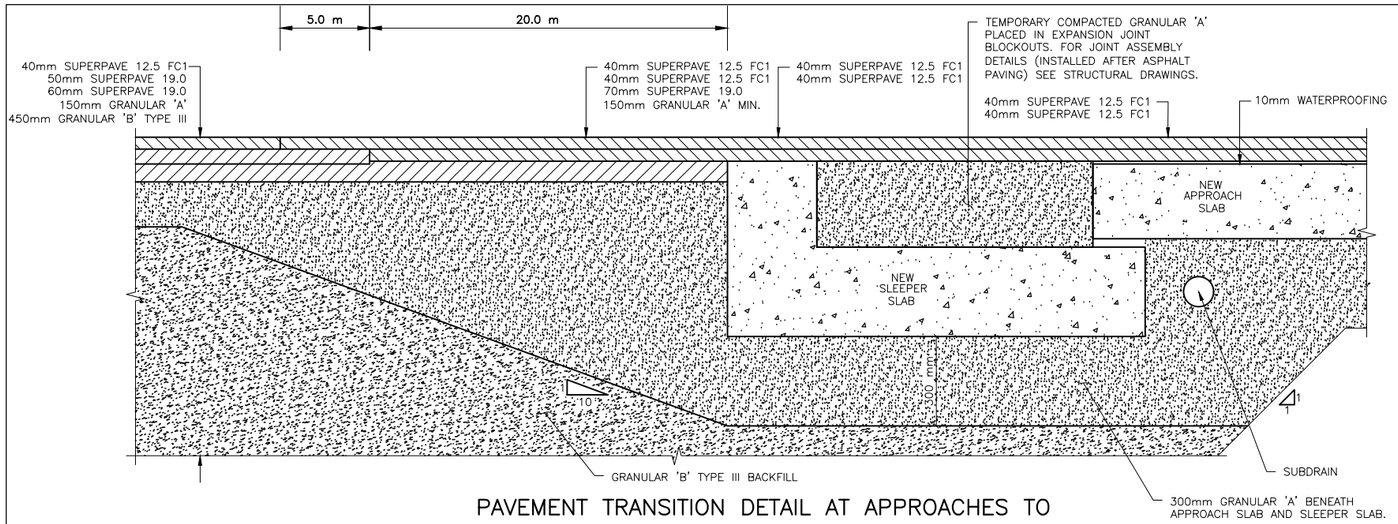

PAVEMENT TRANSITION DETAIL AT APPROACHES TO
COUNTY ROAD 2/34 UNDERPASS

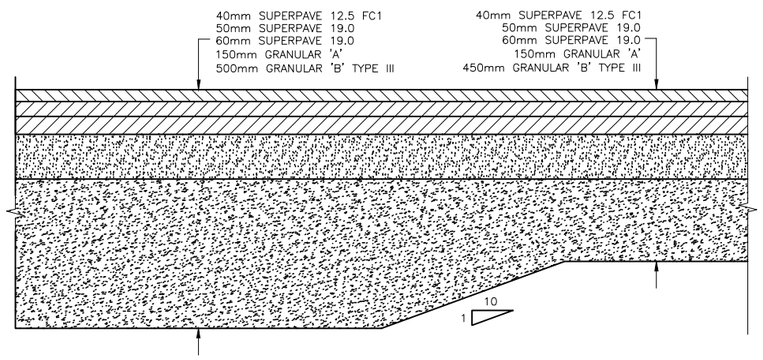

PAVEMENT TRANSITION DETAIL BETWEEN COUNTY ROAD 2/34 AND
SOUTH SERVICE ROAD AND INTERCHANGE RAMPS

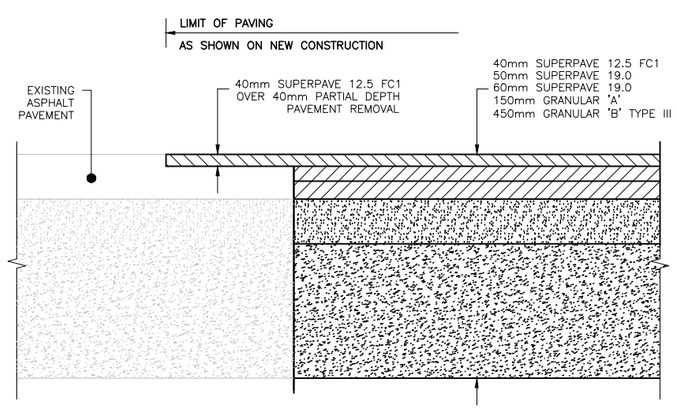

LIMIT OF FULL DEPTH RECONSTRUCTION
PAVEMENT TRANSITION DETAIL
INTERCHANGE RAMPS

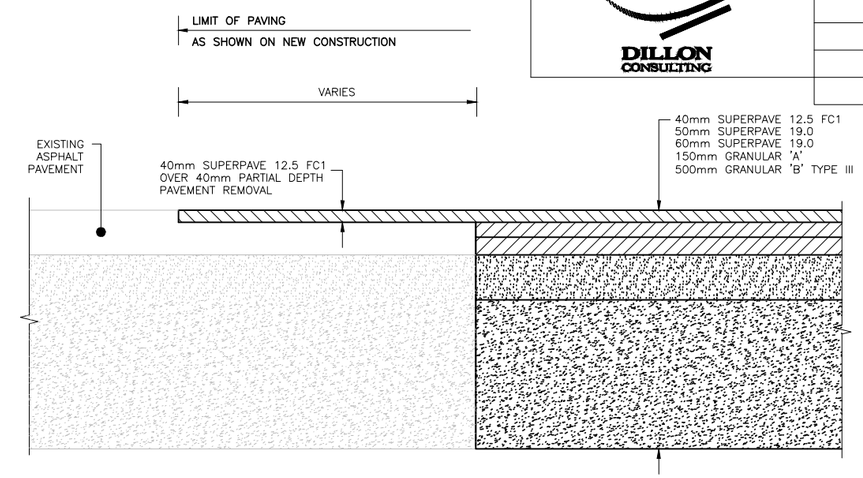

LIMIT OF FULL DEPTH RECONSTRUCTION
PAVEMENT TRANSITION DETAIL
COUNTY ROAD 2/34

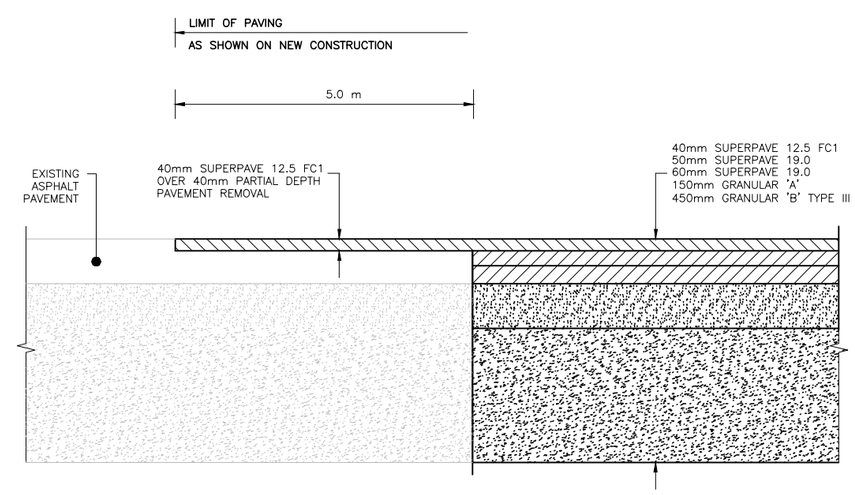

LIMIT OF FULL DEPTH RECONSTRUCTION
PAVEMENT TRANSITION DETAIL
COUNTY ROAD 2 AND SOUTH SERVICE ROAD

N.T.S.

DATE PLOTTED: 1/16/2019 1:53:31 PM
FILE LOCATION: C:\projectwise\working_directory\active\10mcr\d0517910\4013-Miscellaneous Details.dwg

METRIC

PLATE No	
CONT No 2018–4008 WP No 4013–11–00	
MISCELLANEOUS DETAILS	SHEET
HIGHWAY 401	155
DILLON CONSULTING	

LICENSED PROFESSIONAL ENGINEER
M.P. VAN HAREN
100185224
Jan 22/19
PROVINCE OF ONTARIO

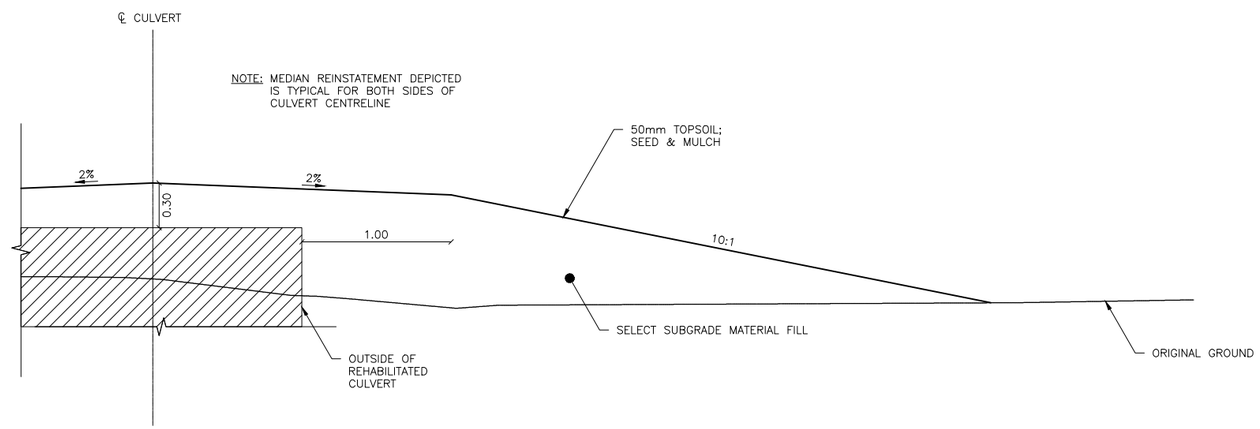

TYPICAL MEDIAN REINSTATEMENT DETAIL AT FINNEY CREEK CULVERT
PARALLEL TO HIGHWAY 401 CENTRELINE

N.T.S.

DATE PLOTTED: 1/16/2019 1:53:44 PM
FILE LOCATION: C:\projectwise\working directory\active\10mcr\d0517908\4013-11-00 Miscellaneous Details.dwg

METRIC

PLATE No

CONT No 2018–4008
WP No 4013–11–00

MISCELLANEOUS DETAILS

COUNTY ROAD 2/34

SHEET 156

DILLON CONSULTING

LICENSED PROFESSIONAL ENGINEER
M.P. VAN HAREN
100185224
Jan 22/19
PROVINCE OF ONTARIO

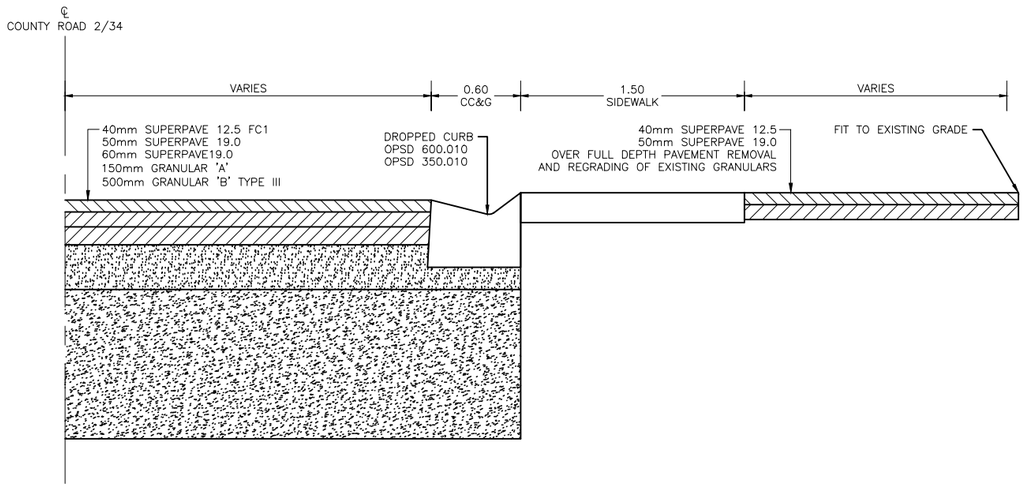

COUNTY ROAD 2/34 TO FULL DEPTH PAVEMENT FOR COMMERCIAL ENTRANCES

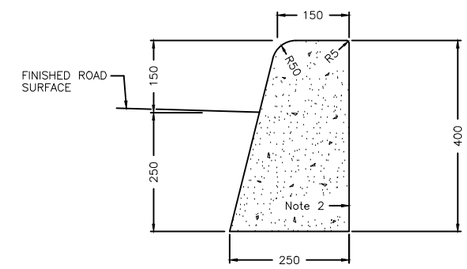

CONCRETE BARRIER CURB DETAIL

NOTES:

1. FOR SLIPFORMING PROCEDURE, A 5% BATTER IS ACCEPTABLE.
2. ALL DIMENSIONS ARE IN MILLIMETRES UNLESS OTHERWISE SHOWN.

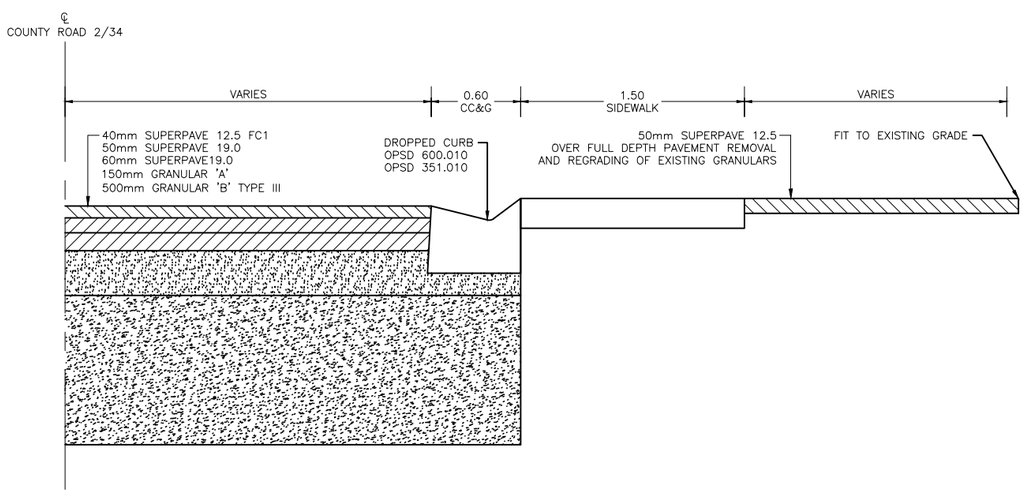

COUNTY ROAD 2/34 TO FULL DEPTH PAVEMENT FOR RESIDENTIAL ENTRANCES

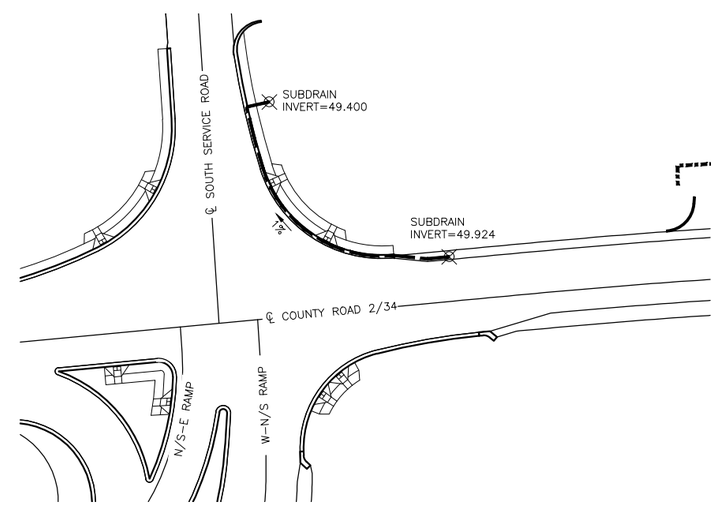

SUBDRAIN LAYOUT AT COUNTY ROAD 2/34 SOUTH RAMP TERMINAL

N.T.S.

DATE PLOTTED: 1/16/2019 1:53:52 PM
FILE LOCATION: C:\projectwise\working_directory\active\10mcr\d0517910\4013-Miscellaneous Details.dwg

METRIC

PLATE No

CONT No 2018–4008
WP No 4013–11–00

MISCELLANEOUS DETAILS

SHEET 157

COUNTY ROAD 2/34

INTERSECTION LAYOUT

DILLON CONSULTING

LICENSED PROFESSIONAL ENGINEER
M.P. VAN HAREN
100185224
JAN 22/19
PROVINCE OF ONTARIO

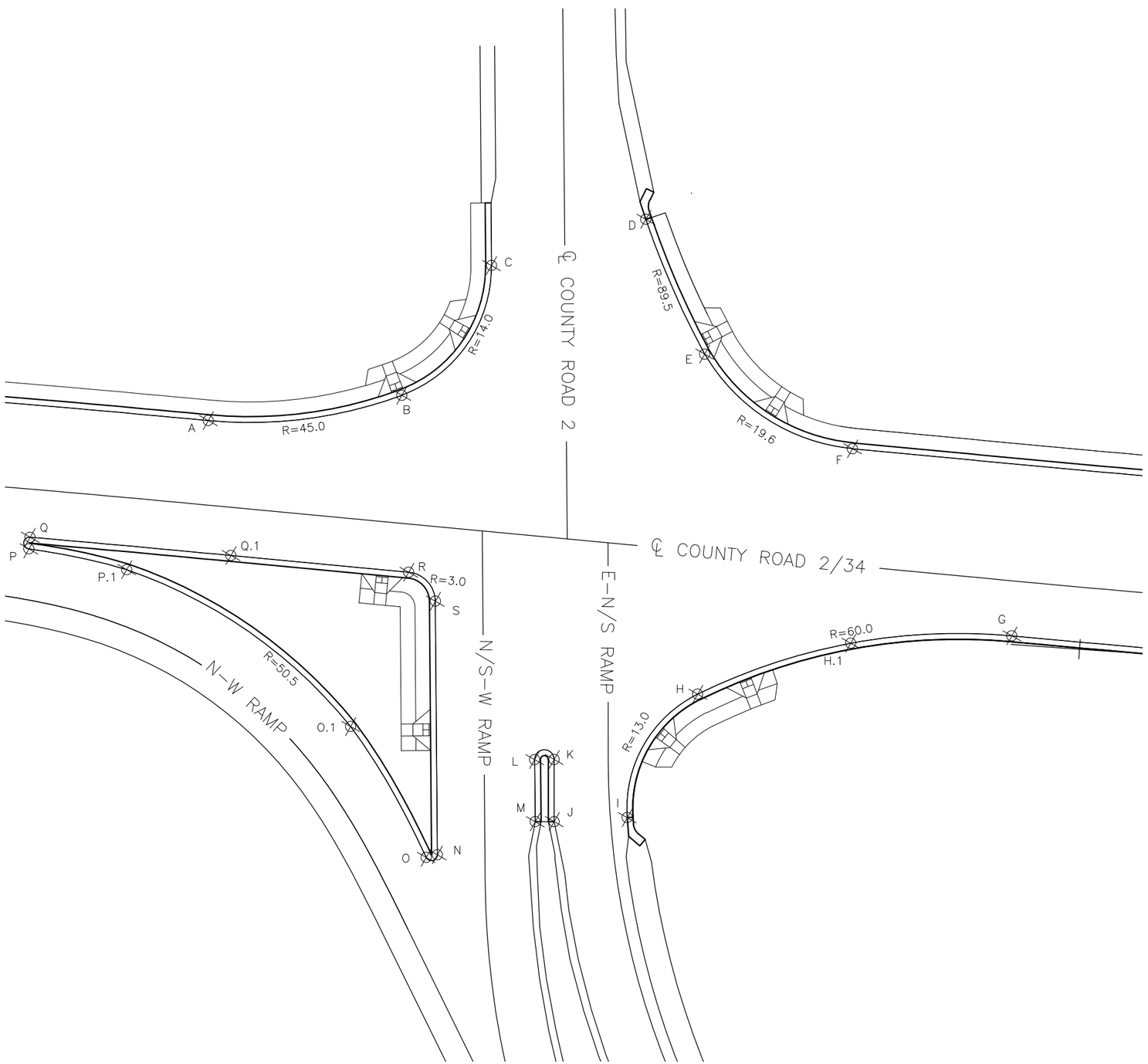

CONCRETE CURB AND GUTTER LAYOUT FOR INTERSECTION AT
COUNTY ROAD 2/34 NORTH RAMP TERMINAL

N.T.S.

CONCRETE CURB AND GUTTER LAYOUT POINTS			
POINT	NORTHING	EASTING	ELEVATION
A	5000321.3847	226279.7171	48.157
B	5000305.4373	226291.6947	48.395
C	5000303.9844	226307.7336	48.404
D	5000292.5765	226319.5996	48.639
E	5000280.5756	226310.5678	49.240
F	5000262.6653	226309.5843	49.950
G	5000239.0977	226300.9540	50.919
H	5000264.1057	226279.9751	49.389
H.1	5000253.0558	226292.1979	50.091
I	5000264.1753	226265.4557	49.011
J	5000270.4726	226261.4350	48.760
K	5000273.6017	226266.9579	48.830
L	5000275.3189	226265.9690	48.765
M	5000272.1514	226260.4683	48.740
N	5000279.1955	226252.6138	48.444
O	5000280.0626	226251.8250	48.412
O.1	5000293.3573	226259.6575	48.368
P	5000330.8985	226259.2872	47.809
P.1	5000321.1573	226262.3606	48.014
Q	5000331.3720	226260.3894	47.833
Q.1	5000312.5933	226268.8602	48.145
R	5000295.9388	226276.3060	48.534
S	5000292.1146	226275.0643	48.584

DATE PLOTTED: 1/22/2019 9:43:57 AM
FILE LOCATION: C:\projectwise\working_directory\active\10nr1\d0517910\4013-Miscellaneous Details.dwg

METRIC

PLATE No

CONT No 2018-4008
WP No 4013-11-00

MISCELLANEOUS DETAILS

SHEET 158

COUNTY ROAD 2/34
INTERSECTION LAYOUT

DILLON CONSULTING

LICENSED PROFESSIONAL ENGINEER
M.P. VAN HAREN
100185224
JAN 22/19
PROVINCE OF ONTARIO

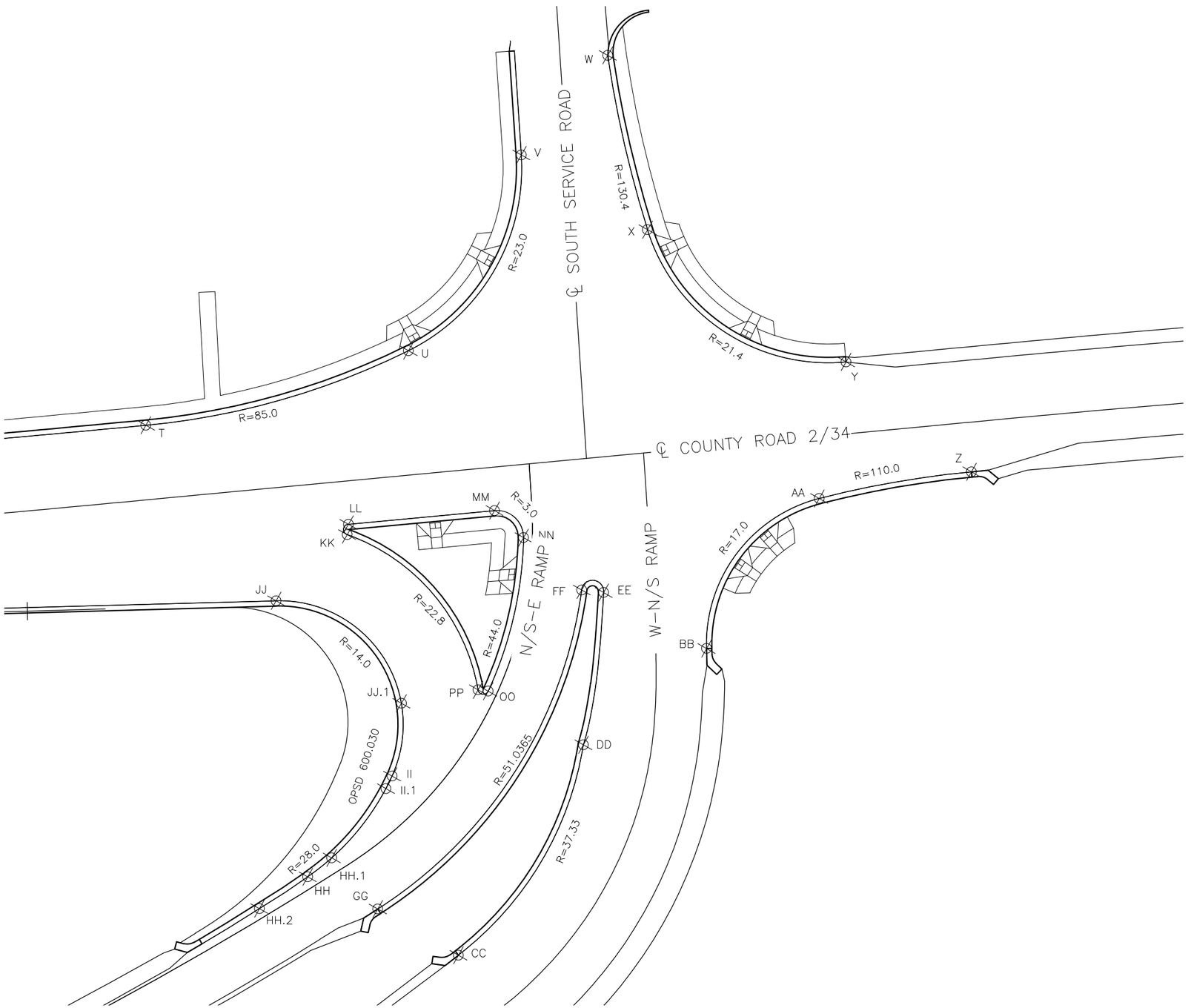

CONCRETE CURB AND GUTTER LAYOUT FOR INTERSECTION AT
COUNTY ROAD 2/34 SOUTH RAMP TERMINAL

CONCRETE CURB AND GUTTER LAYOUT POINTS			
POINT	NORTHING	EASTING	ELEVATION
AA	4999864.3617	226521.1067	50.634
BB	4999867.1113	226500.0717	50.523
CC	4999874.4866	226456.0770	49.510
DD	4999873.8773	226483.7464	49.950
EE	4999880.3491	226499.8595	50.639
FF	4999882.6507	226498.8842	50.675
GG	4999884.9902	226456.1454	50.254
HH	4999893.6822	226455.4145	49.871
HH.1	4999892.3661	226458.6169	49.918
HH.2	4999896.6688	226449.6027	49.773
II	4999890.9744	226470.0206	50.039
II.1	4999890.8847	226468.4530	50.010
JJ	4999912.1394	226480.8268	51.163
JJ.1	4999894.1020	226477.7118	50.208
KK	4999908.8207	226491.2941	51.073
LL	4999909.2662	226492.3776	51.062
MM	4999895.6511	226501.8583	50.834
NN	4999891.2919	226500.8122	50.771
OO	4999886.2378	226483.7252	50.509
PP	4999887.2995	226483.2944	50.509
T	4999934.7178	226490.8615	51.492
U	4999913.0115	226512.8047	50.839
V	4999912.7887	226538.3456	50.468
W	4999909.8278	226552.9597	50.385
X	4999896.2075	226538.0114	50.516
Y	4999869.3163	226536.0375	50.294
Z	4999850.8576	226532.1963	50.596

N.T.S.

DATE PLOTTED: 1/22/2019 9:43:43 AM
FILE LOCATION: C:\projectwise\working_directory\active\10nv1\d0517910\4013-Miscellaneous Details.dwg

METRIC

PLATE No

CONT No 2018-4008
WP No 4013-11-00

MISCELLANEOUS DETAILS

SHEET 159

COUNTY ROAD 2/34
GROUND IMPROVEMENTS

DILLON CONSULTING

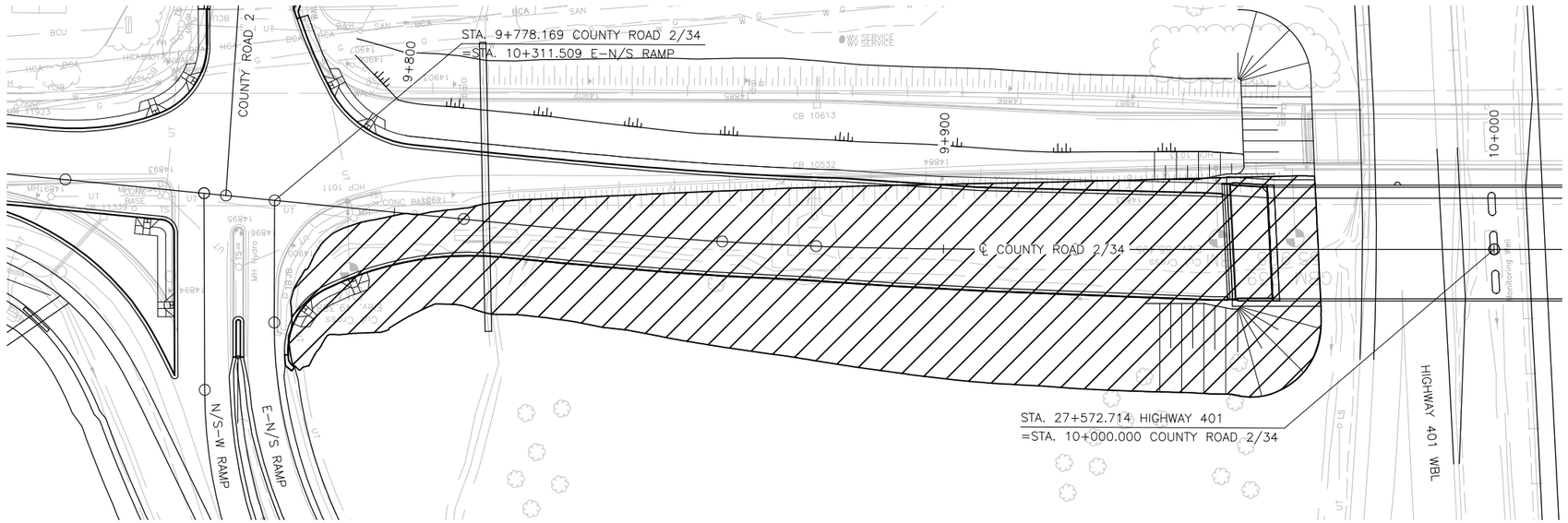

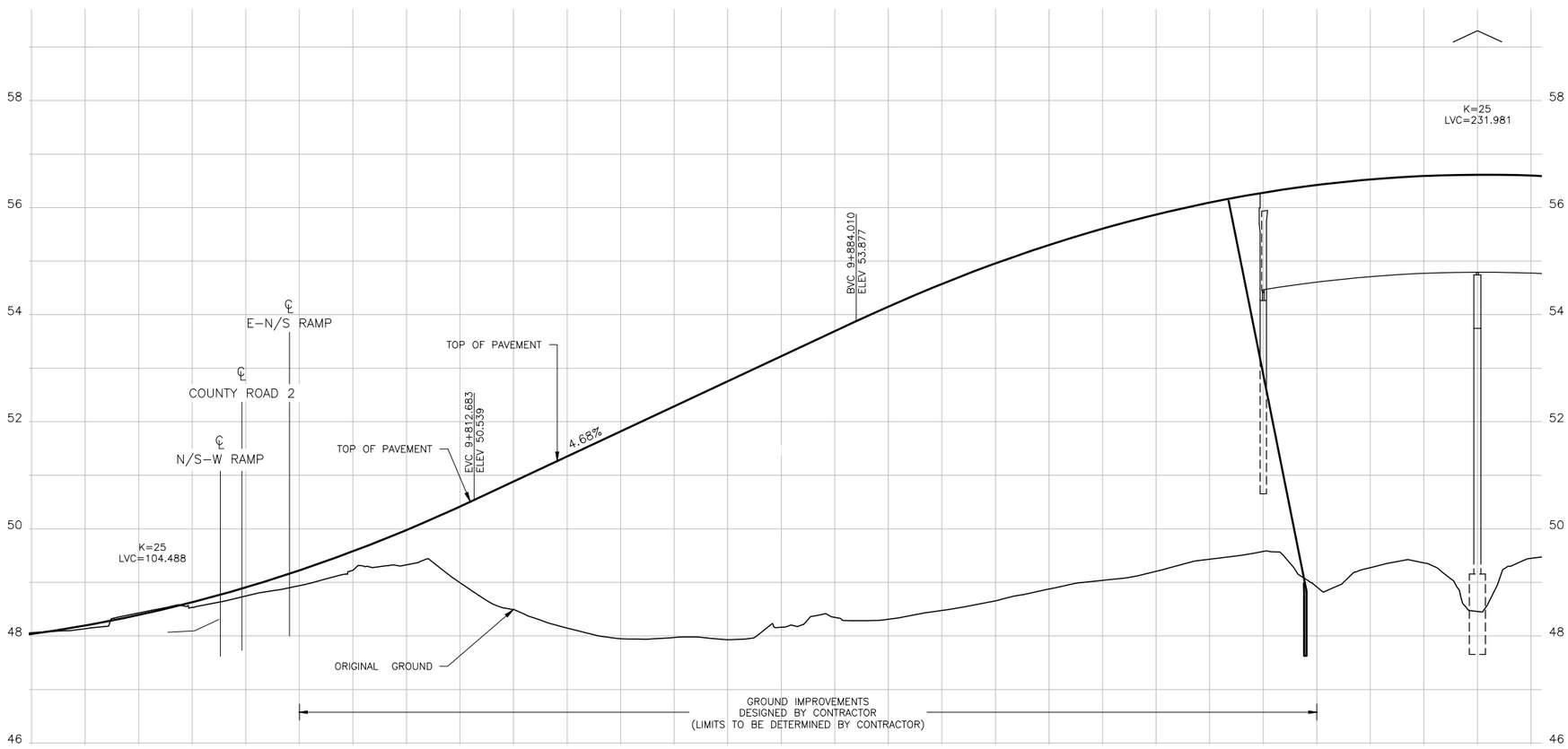

GENERAL NOTES:

1. GROUND IMPROVEMENTS TO BE DESIGNED BY CONTRACTOR. TRANSITION BETWEEN GROUND IMPROVEMENT AREAS AND UNIMPROVED AREAS SHALL BE DESIGNED BY CONTRACTOR.
2. EARTH EXCAVATION, STOCKPILED TOPSOIL AND SELECT SUBGRADE MATERIAL FILL QUANTITIES ARE BASED ON 0.3m STRIPPING OF EXISTING TOPSOIL AREAS.

LEGEND:

AREA OF GROUND IMPROVEMENTS DESIGNED BY CONTRACTOR (LIMITS TO BE DETERMINED BY CONTRACTOR)

LICENSED PROFESSIONAL ENGINEER
M.P. VAN HAREN
100185224
Jan 22/19
PROVINCE OF ONTARIO

DATE PLOTTED: 1/21/2019 10:03:35 PM
FILE LOCATION: C:\projectwise\working_directory\active\10nv1\d0517910\4013-Ground_Improvements.dwg

METRIC

PLATE No

CONT No 2018-4008
WP No 4013-11-00

MISCELLANEOUS DETAILS

SHEET 160

COUNTY ROAD 2/34

GROUND IMPROVEMENTS

DILLON CONSULTING

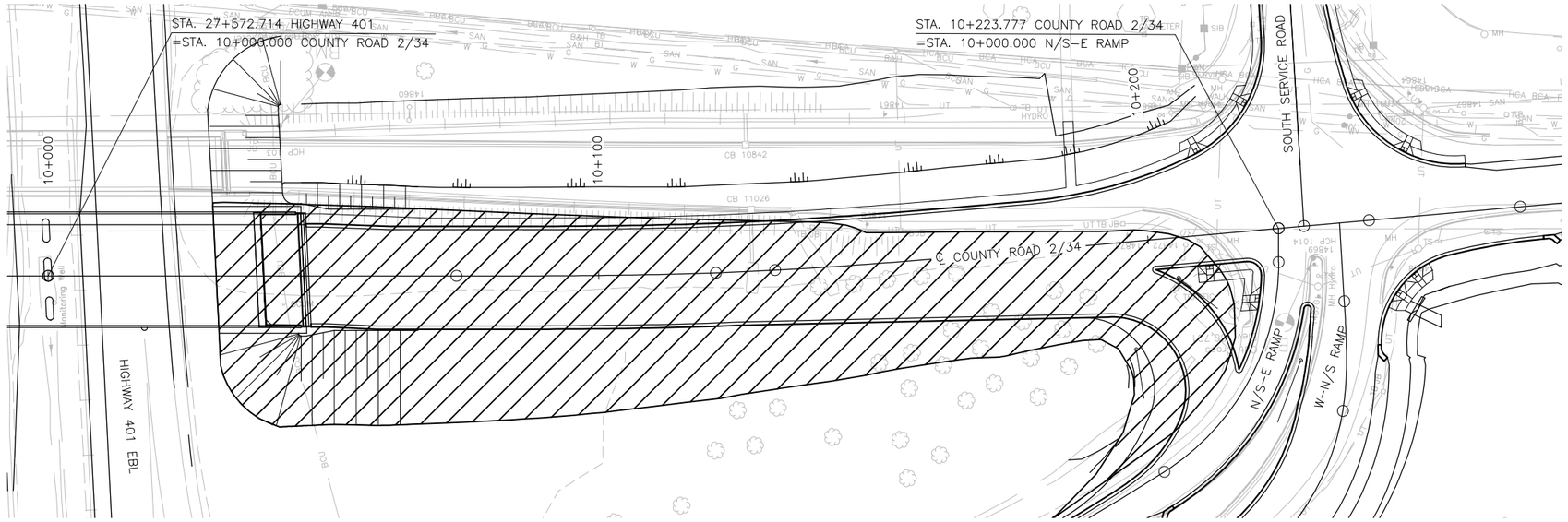

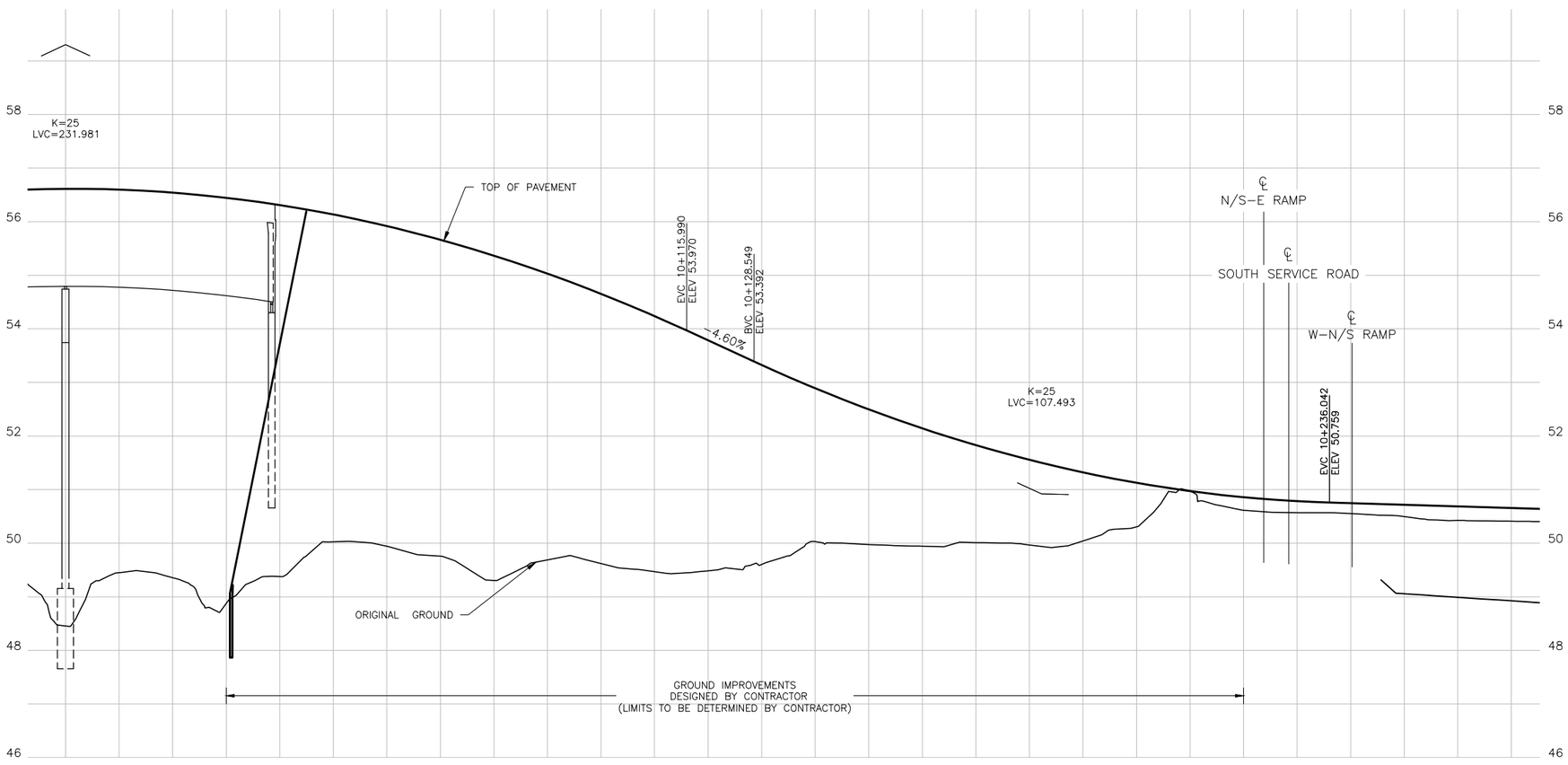

GENERAL NOTES:

1. GROUND IMPROVEMENTS TO BE DESIGNED BY CONTRACTOR. TRANSITION BETWEEN GROUND IMPROVEMENT AREAS AND UNIMPROVED AREAS SHALL BE DESIGNED BY CONTRACTOR.
2. EARTH EXCAVATION, STOCKPILED TOPSOIL AND SELECT SUBGRADE MATERIAL QUANTITIES ARE BASED ON 0.3m STRIPPING OF EXISTING TOPSOIL AREAS.

LEGEND:

AREA OF GROUND IMPROVEMENTS DESIGNED BY CONTRACTOR (LIMITS TO BE DETERMINED BY CONTRACTOR)

LICENSED PROFESSIONAL ENGINEER
M. VAN HAREN
100185224
Jan 22/19
PROVINCE OF ONTARIO

DATE PLOTTED: 1/22/2019 9:34:41 AM
FILE LOCATION: C:\projectwise\working_directory\active\10mcr\d0517910\4013-Ground_Improvements.dwg

METRIC

PLATE No

CONT No 2018-4008
WP No 4013-11-00

MISCELLANEOUS DETAILS

SHEET 161

COUNTY ROAD 2/34

GROUND IMPROVEMENTS

DILLON CONSULTING

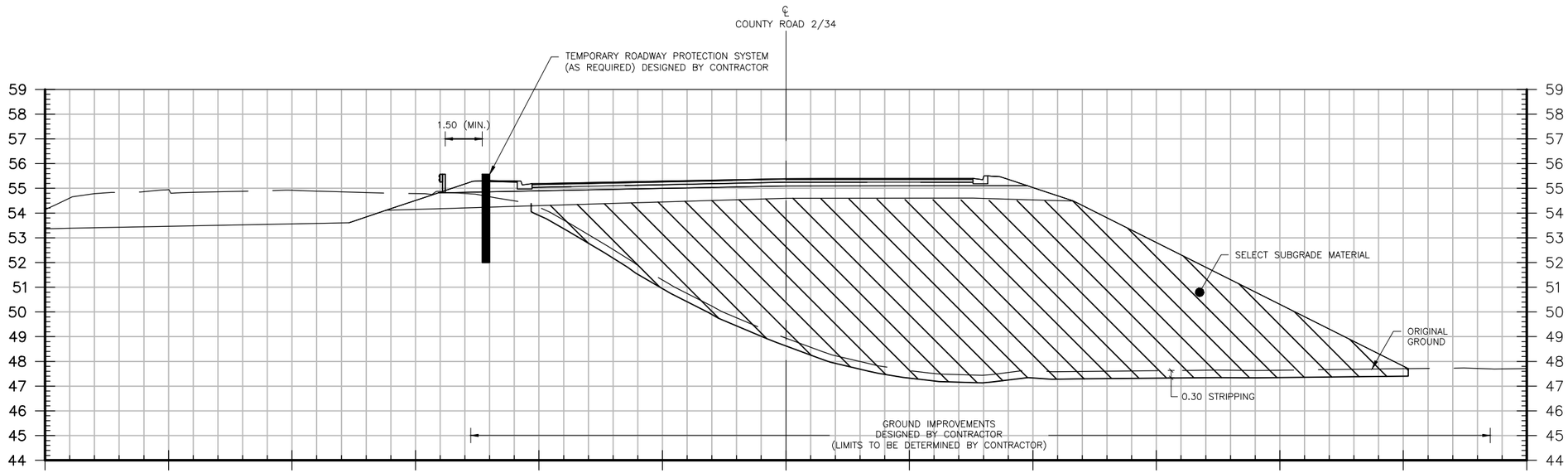

GENERAL NOTES:

1. GROUND IMPROVEMENTS TO BE DESIGNED BY CONTRACTOR. TRANSITION BETWEEN GROUND IMPROVEMENT AREAS AND UNIMPROVED AREAS SHALL BE DESIGNED BY CONTRACTOR.
2. EARTH EXCAVATION, STOCKPILED TOPSOIL AND SELECT SUBGRADE MATERIAL FILL QUANTITIES ARE BASED ON 0.3m STRIPPING OF EXISTING TOPSOIL AREAS.

LEGEND:

DENOTES PAYMENT LIMITS FOR EARTH EXCAVATION AND SELECT SUBGRADE MATERIAL.

N.T.S.

DATE PLOTTED: 1/21/2019 5:38:53 PM
FILE LOCATION: C:\projectwise\working directory\active\10mcr\d0517910\4013-Ground Improvements.dwg

MINISTRY OF TRANSPORTATION, ONTARIO

METRIC
DIMENSIONS ARE IN METRES AND/OR MILLIMETRES UNLESS OTHERWISE SHOWN. STATIONS IN KILOMETRES + METRES.

CONT No. 2018-4008
WP No. 4013-11-00

COUNTY ROAD 2/34 UNDERPASS
HIGHWAY 401
SETTLEMENT MONITORING LOCATIONS

SHEET 162

GOLDER

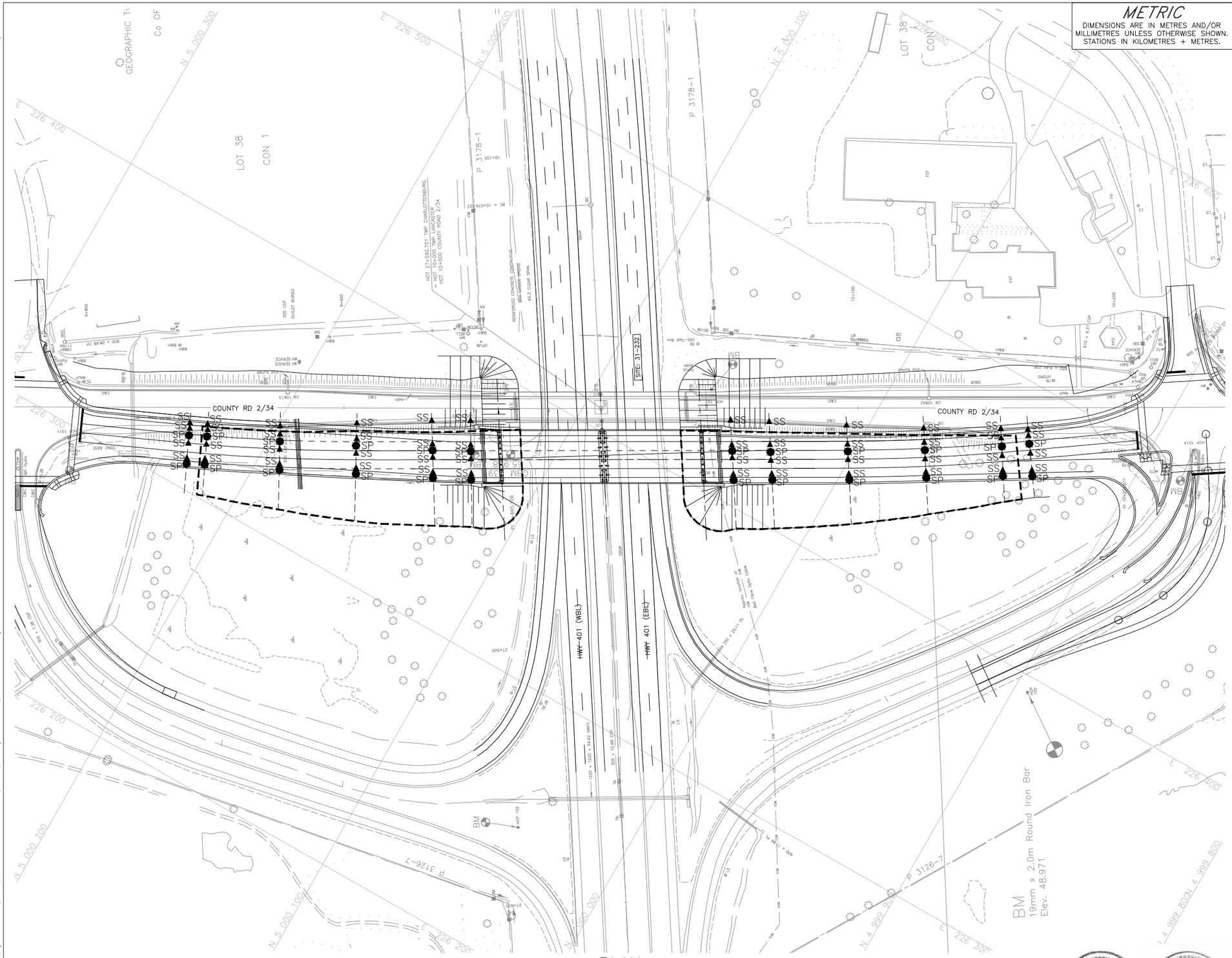

PLAN
SCALE
15 0 15 30 m

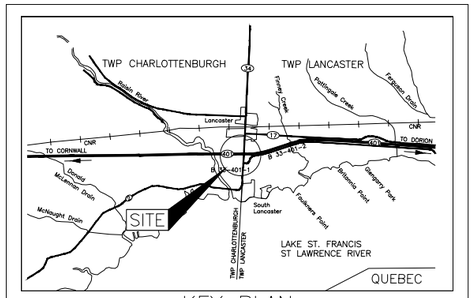

KEY PLAN
SCALE
1.5 0 1.5 3 km

LEGEND

- Settlement Plate (SP)
- Surface Settlement Points (SS)
- Approximate Ground Improvement Area (Design by Contractor)
- Instrumentation Line

NOTES

1. Area of ground improvement will depend on ground improvement method selected and is to be determined by contractor.
2. Design build contractor to provide instrumentation drawings outlining instrumentation details which will include:

- 5 instrumentation lines per approach embankment within ground improvement area.
- 1 instrumentation line 5 m from ground improvement area.

REFERENCE

Base plans provided in digital format by Dillon, drawing file no. Mega 6 – 4 – Profile Alternatives–New Ramp.dwg, received JANUARY 11, 2018.

LICENSED PROFESSIONAL ENGINEER W. CAVERS 100077934 Jan 16/19 PROVINCE OF ONTARIO

REGISTERED PROFESSIONAL ENGINEER F. J. HEFFERNAN PROVINCE OF ONTARIO

NO.	DATE	BY	REVISION
0	.	.	.

Geocres No.:

HWY. 401		PROJECT NO. 1772182	DIST. EASTERN
SUBM'D. SS	CHKD. SS	DATE: 17/01/2019	SITE: 31-232
DRAWN: JM	CHKD. WC	APPD. FJH	DWG. 1

PLOT DATE: January 17, 2019
FILENAME: K:\Active\Spatial_M\MTO\MegaEasternRailway6\99_PROJ\1772182_Dillon_PavementFoundations\05_PROD\0011_Assignment12_CRS_34\1772182-0011-BS-0001.dwg

MINISTRY OF TRANSPORTATION, ONTARIO

METRIC
DIMENSIONS ARE IN METRES AND/OR MILLIMETRES UNLESS OTHERWISE SHOWN. STATIONS IN KILOMETRES + METRES.

CONT No. 2018-4008
WP No. 4013-11-00

COUNTY ROAD 2/34 UNDERPASS
HIGHWAY 401
SETTLEMENT MONITORING
SECTIONS AND DETAILS

SHEET 163

GOLDER

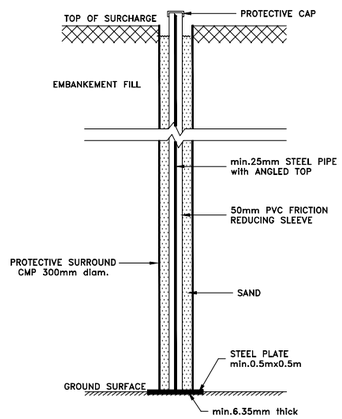

SETTLEMENT ROD/PLATE SYSTEM (SP)
NOT TO SCALE

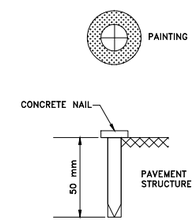

SURFACE SETTLEMENT POINTS ON PAVEMENT (SS)
NOT TO SCALE

LEGEND

- ● Settlement Rod/Plate (SP)
- ▲ Surface Settlement Points (SS)

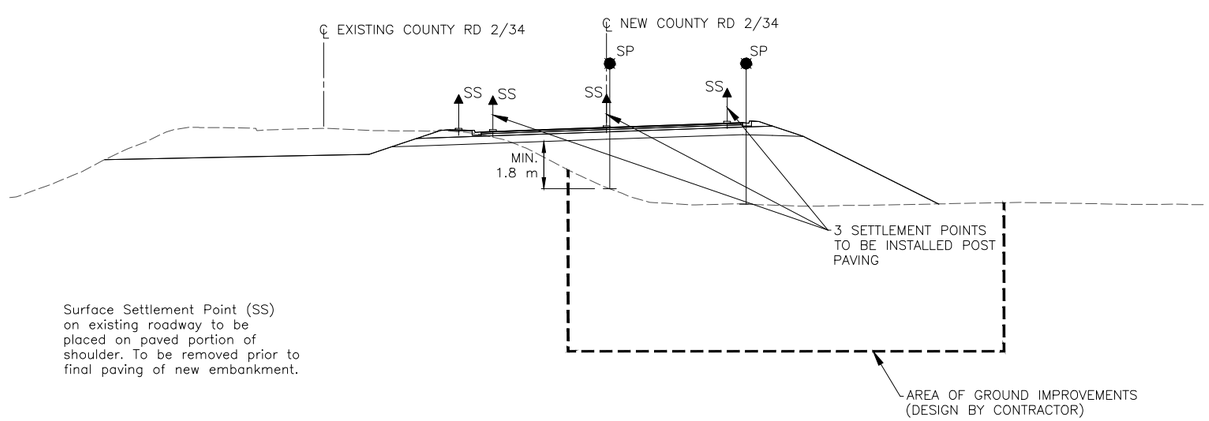

TYPICAL INSTRUMENTATION SECTION
NOT TO SCALE

LICENSED PROFESSIONAL ENGINEER W. CAYERS 100077034 PROVINCE OF ONTARIO

REGISTERED PROFESSIONAL ENGINEER F. J. HEFFERNAN PROVINCE OF ONTARIO

NO.	DATE	BY	REVISION
0	.	.	.

Geocres No.

HWY. 401		PROJECT NO. 1772182	DIST. EASTERN
SUBM'D. SS	CHKD. SS	DATE: 17/01/2019	SITE: 31-232
DRAWN: JM	CHKD. WC	APPD. FJH	DWG. 2

PLOT DATE: January 17, 2019
FILENAME: N:\Active\Spotlio_MI\MTO\MegaExtensRetainers\09_PROD\1772182_DRilon_PavementsFoundations\40_PROD\001_Assignment12_CR2_34\1772182-001-BC-0002.dwg

METRIC

PLATE No
CONT No 2018-4008
WP No 4013-11-00

MISCELLANEOUS DETAILS

SHEET 164

RAISIN RIVER

EXCAVATION AND BACKFILL DETAILS

DILLON CONSULTING

NOTES:

1. EARTH EXCAVATED AT PIERS SHALL BE STOCK PILED AND REUSED AS NATIVE BACKFILL MATERIAL AT THE NEW AND EXISTING PIERS. NATIVE BACKFILL SHALL BE COMPACTED TO 95% OF ITS DRY DENSITY.

APPLICABLE STANDARD DRAWINGS

OPSD-3101.150 WALLS-ABUTMENT, BACKFILL MINIMUM GRANULAR REQUIREMENT

LEGEND

- DENOTES PAYMENT LIMITS FOR EARTH EXCAVATION FOR STRUCTURES
- DENOTES PAYMENT LIMITS FOR GRANULAR 'B' TYPE III BACKFILL
- DENOTES PAYMENT LIMITS FOR NATIVE BACKFILL (STREAMBED MATERIAL
- DENOTES RIP RAP AND ROCK PROTECTION

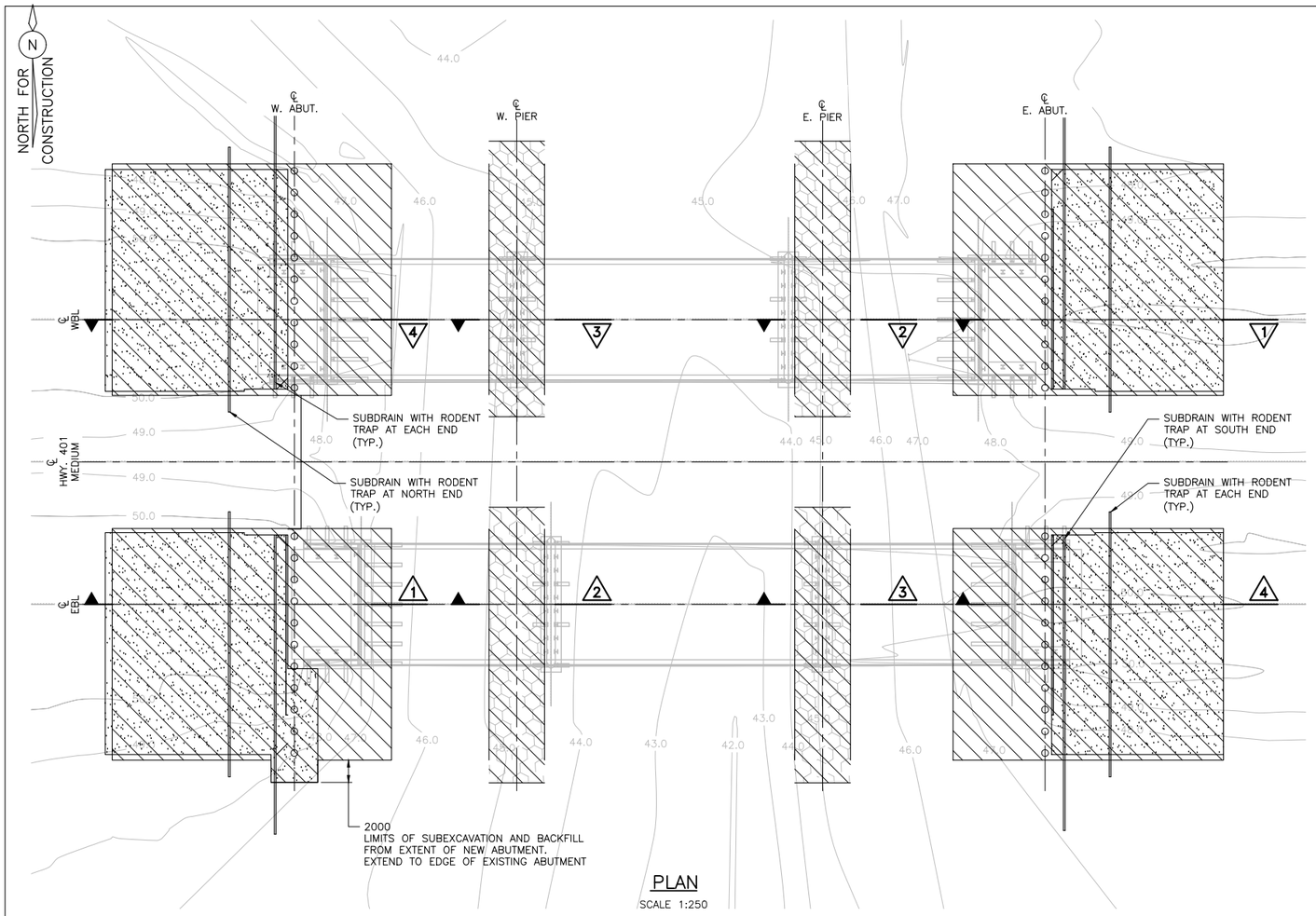

PLAN
SCALE 1:250

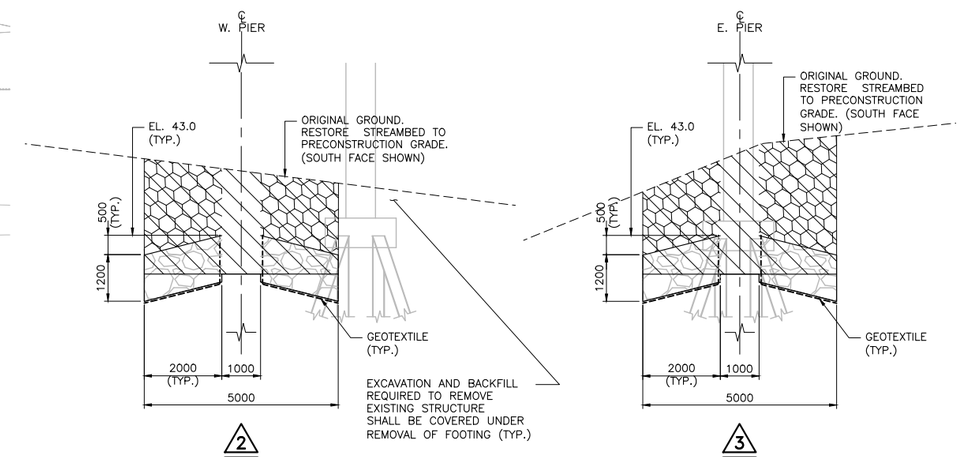

2
SCALE 1:75
EASTBOUND STRUCTURE SHOWN
WESTBOUND STRUCTURE SIMILAR

3
SCALE 1:75
EASTBOUND STRUCTURE SHOWN
WESTBOUND STRUCTURE SIMILAR

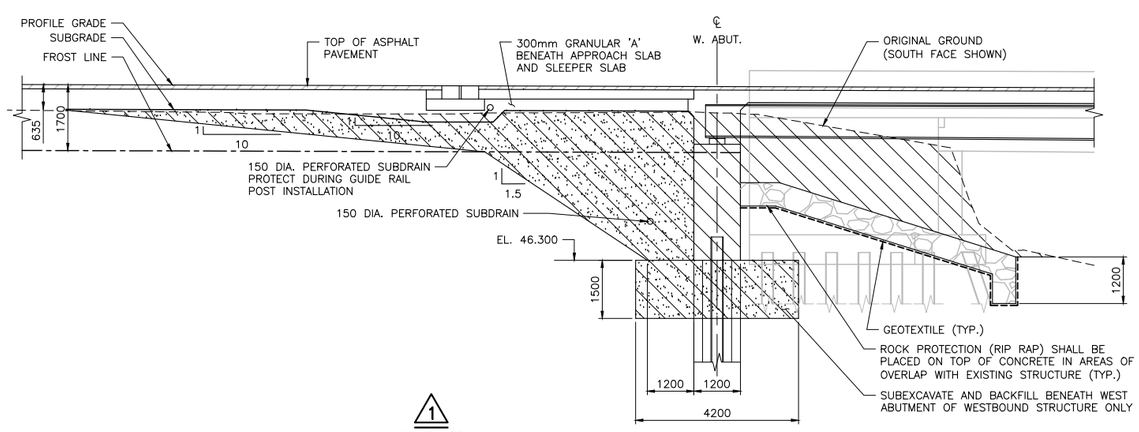

1
SCALE 1:75
EASTBOUND STRUCTURE SHOWN
WESTBOUND STRUCTURE SIMILAR

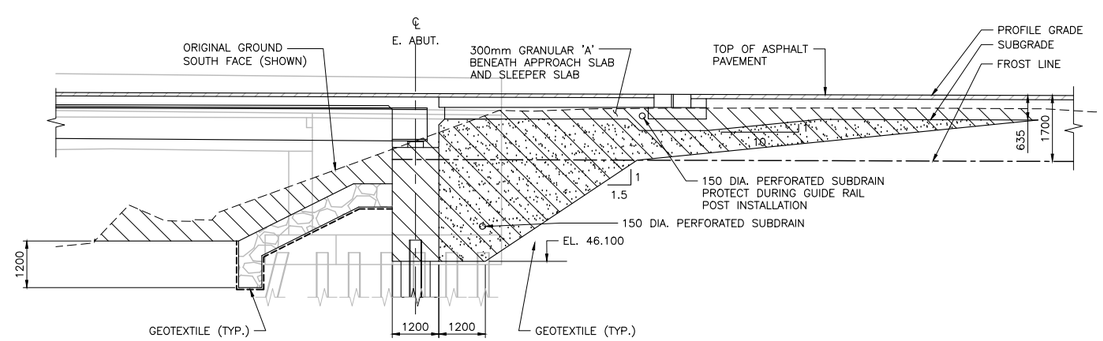

4
SCALE 1:75
EASTBOUND STRUCTURE SHOWN
WESTBOUND STRUCTURE SIMILAR

LICENSED PROFESSIONAL ENGINEER A. W. KHAN 100089447 18 JAN, 2019 PROVINCE OF ONTARIO

LICENSED PROFESSIONAL ENGINEER B.R. CRAIG JAN. 18/19 PROVINCE OF ONTARIO

DATE PLOTTED: 1/18/2019 8:34:43 AM
FILE LOCATION: c:\projectwise\working directory\active\10bp\d0515028\31-231-Excavation and Backfill.dwg

METRIC

PLATE No

CONT No 2018–4008
WP No 4138–11–01

MISCELLANEOUS DETAILS

SHEET 165

HIGHWAY 401

EXCAVATION AND BACKFILL DETAILS

DILLON CONSULTING

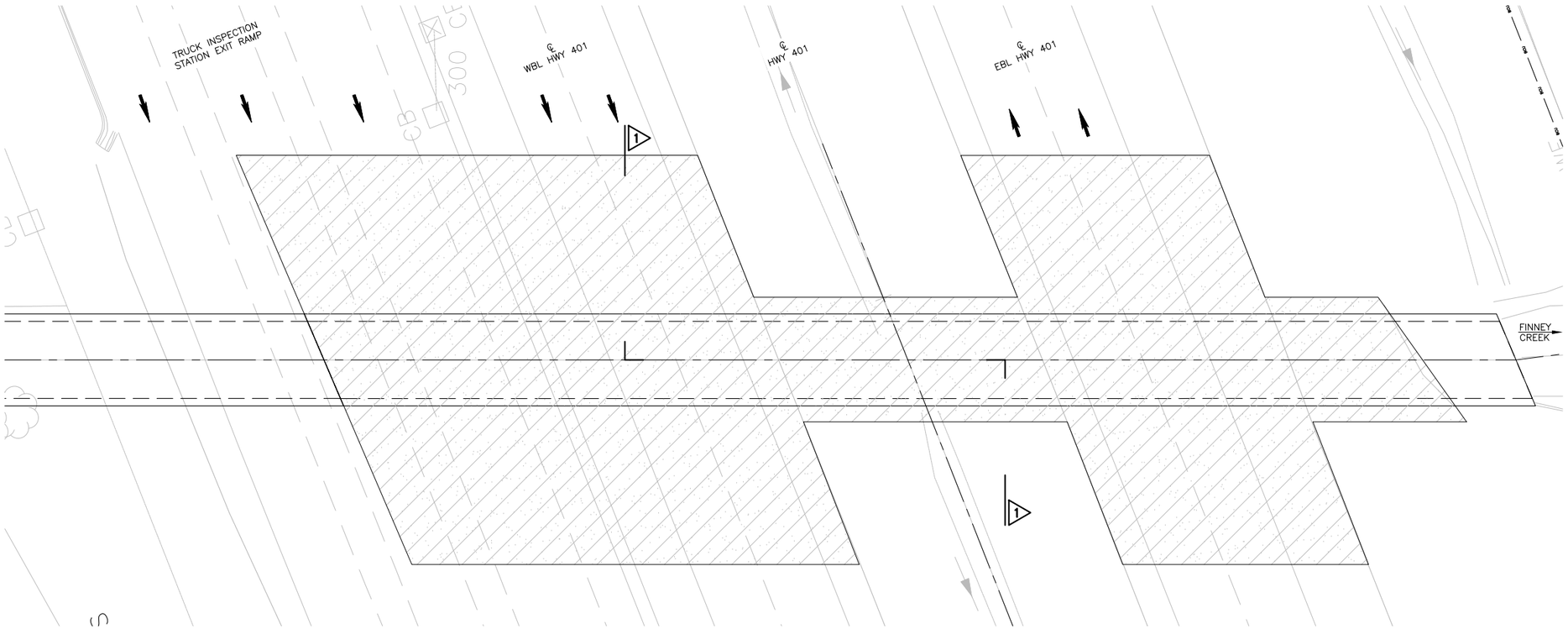

PLAN

SCALE 1:150

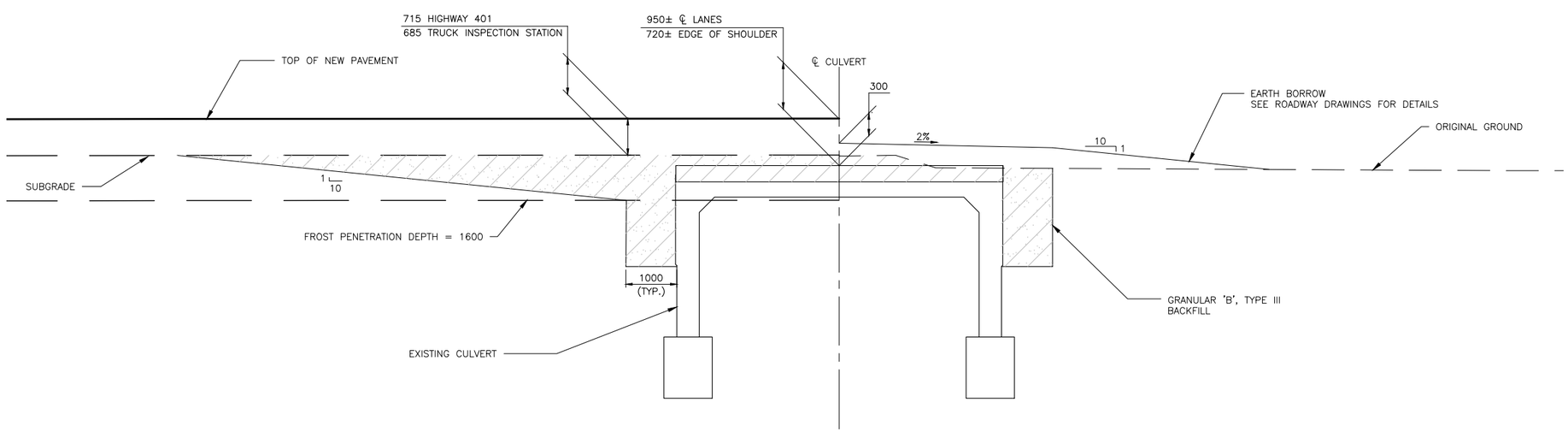

1 EXCAVATION AND BACKFILL LIMITS

1:50

SUPPLEMENTAL LEGEND

DENOTES PAYMENT LIMITS FOR EXCAVATION FOR STRUCTURES

DENOTES PAYMENT LIMITS FOR GRANULAR 'B' TYPE III BACKFILL

APPLICABLE STANDARD DRAWINGS

OPSD 803.010 — BACKFILL AND COVER FOR CONCRETE CULVERTS WITH SPANS LESS THAN OR EQUAL TO 3.0 M

LICENSED PROFESSIONAL ENGINEER B.R. CRAIG JAN. 18/19 PROVINCE OF ONTARIO

LICENSED PROFESSIONAL ENGINEER M.J.D. HAYMAN 100190150 01.18.19 PROVINCE OF ONTARIO

DATE PLOTTED: 1/18/2019 7:08:19 AM
FILE LOCATION: c:\projectwise\working_directory\active\10bp\d0584061\4013-Excavation and Backfill.dwg

METRIC

PLATE No

CONT No 2018-4008
WP No 4013-11-00

MISCELLANEOUS DETAILS

SHEET 166

COUNTY ROAD 2/34

EXCAVATION AND BACKFILL DETAILS

DILLON CONSULTING

APPLICABLE STANDARD DRAWINGS

OPSD-3101.150 WALLS-ABUTMENT, BACKFILL MINIMUM GRANULAR REQUIREMENT

LEGEND

DENOTES PAYMENT LIMITS FOR EARTH EXCAVATION FOR STRUCTURES

DENOTES PAYMENT LIMITS FOR GRANULAR 'B' TYPE III BACKFILL

DENOTES LIMITS FOR EARTH EXCAVATION AS PART OF REMOVAL OF BRIDGE STRUCTURE

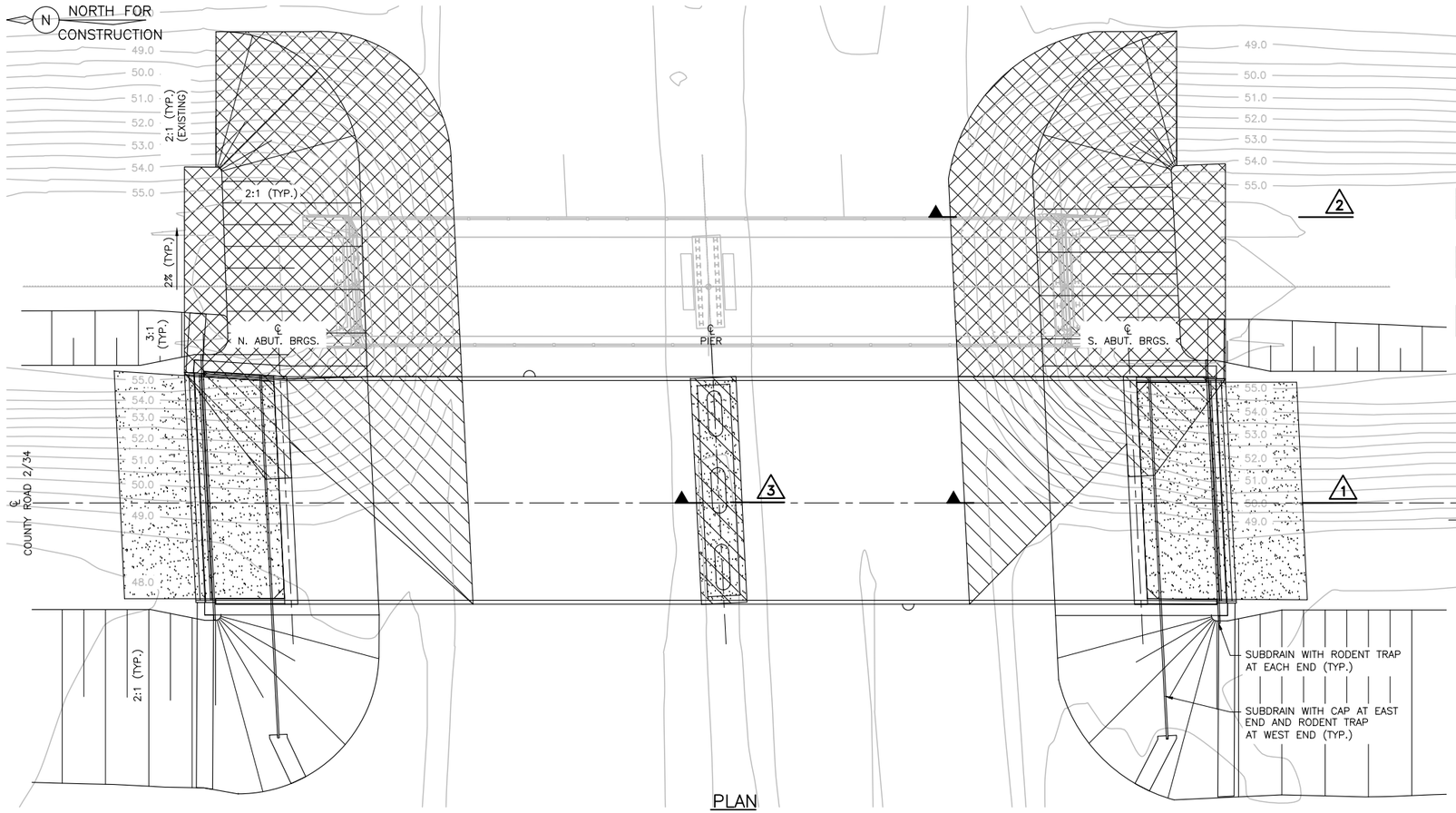

PLAN

SCALE 1:250

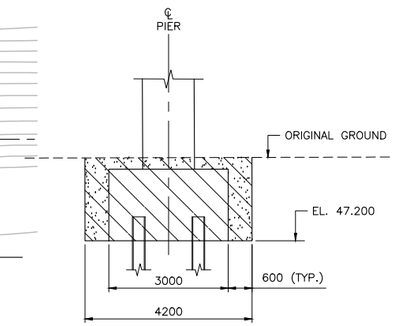

3

SCALE 1:75

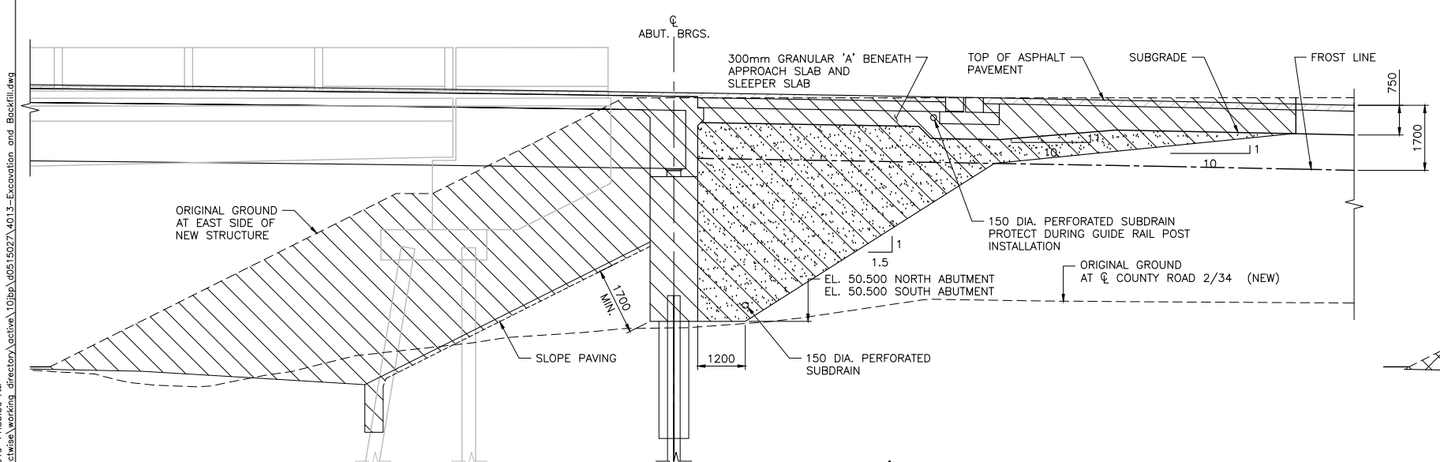

1

SCALE 1:75

NOTE: SOUTH ABUTMENT SHOWN, NORTH ABUTMENT SIMILAR

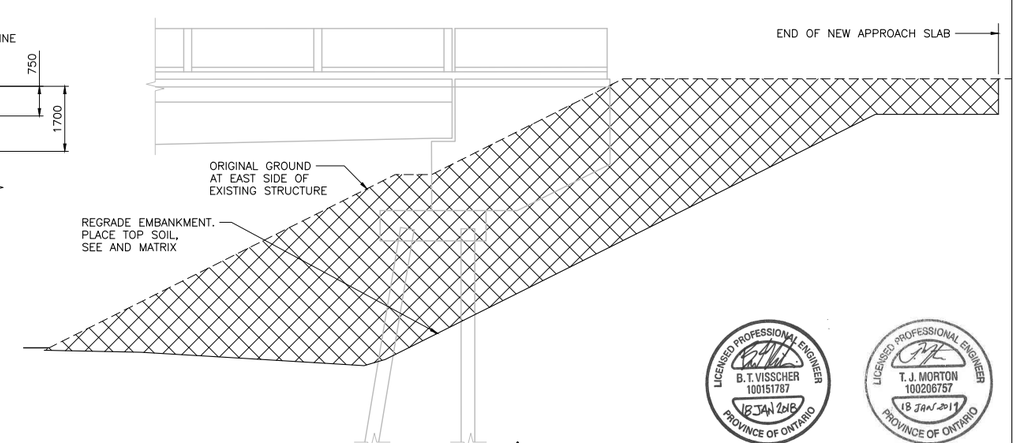

2

SCALE 1:75

NOTE: SOUTH ABUTMENT SHOWN, NORTH ABUTMENT SIMILAR

LICENSED PROFESSIONAL ENGINEER B.T. VISSCHER 100151787 18 JAN 2018 PROVINCE OF ONTARIO

LICENSED PROFESSIONAL ENGINEER T. J. MORTON 100206757 18 JAN 2017 PROVINCE OF ONTARIO

DATE PLOTTED: 1/18/2019 11:35:56 AM
FILE LOCATION: c:\projectwise\working directory\active\10lbp\d0515027\4013-Excavation and Backfill.dwg